GB DE FR

CX3050-CX3060 Wiring diagram

EXcon automatic
EXcon automatik
Système de règulation EXcon

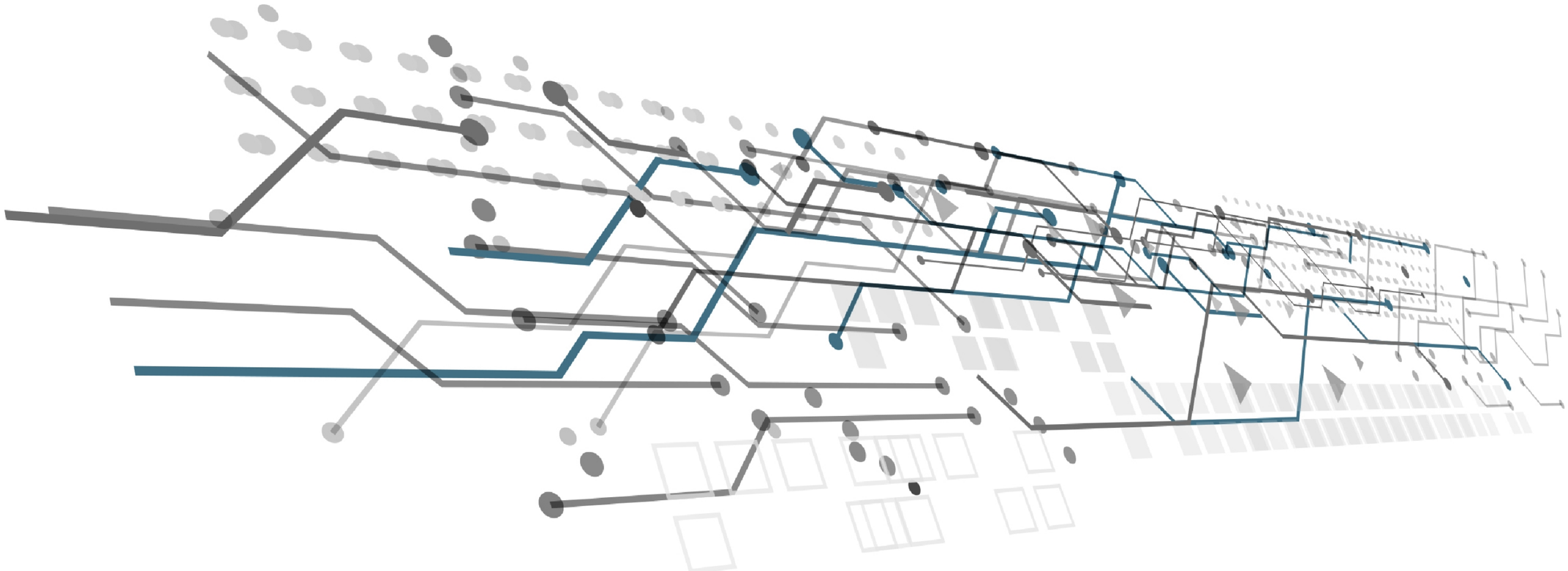

EXHAUSTO A/S
Odensevej 76 · DK-5550 Langeskov
Tel. +45 65661234 · exhausto@exhausto.dk
www.exhausto.dk

a member of Soler&Palau Ventilation Group

EXHAUSTO

CX3050 & CX3060

With airflow control

0400103

400VAC - Pressure deicing
CX3050: 2500 m³/h
CX3060: 3300 m³/h

Manufactured by: EXHAUSTO	Project: CX3050 & CX3060 - With AFC	Start date:	24-08-2022	Constructor:	DKTSA	Page:	1
		Revision date:	18-03-2026	Approved by:	DKLEG	Previous page:	0
Drawing number: 0400103	Page Title: Project information	Revision:	F	Scale:	1:1	Next page:	2
		Replaces revision:	E	Format:	A3	Pages in total:	48

Page	Title GB	Titel DE	Titre FR	Last edit
1	Project information	Projektinformationen	Renseignements sur le projet	24-09-2025
4	Standards	Standards	Normes	31-01-2024
4.1	Quick guide for language matrix	Kurzanleitung zur Sprachmatrix	Guide rapide pour la matrice linguistique	26-02-2024
5	Component overview	Komponentenübersicht	Présentation des composants	26-02-2024
8	Terminals -X5	Anschlüsse -X5	Bornes -X5	07-03-2024
9	Terminals -X1_EXT(2)	Anschlüsse -X1_EXT(2)	Bornes -X1_EXT(2)	11-01-2024
10	E-box lay-out	Aufbau der Elektronikbox	Disposition du boitier électronique	18-09-2025
11	Fuses & Terminals	Sicherungen und Anschlüsseklemmen	Fusibles et bornes	22-09-2025
12	Main power circuits	Hauptstromkreise	Principaux circuits d'alimentation	18-09-2025
13	Main power circuits	Hauptstromkreise	Principaux circuits d'alimentation	18-09-2025
14	Wiring EXcon Master	Verdrahtung EXcon Master	Câblage du maître EXcon	18-09-2025
15	Wiring EXT module (1)	Verdrahtung EXT module (1)	Câblage du module EXT (1)	18-09-2025
16	Wiring EXT module (2)	Verdrahtung EXT module (2)	Câblage du module EXT (2)	26-02-2024
17	PTH connections	PTH-Verbindungen	Connexions PTH	18-09-2025
18	Configurations	Konfigurationen	Configurations	12-01-2024
19	1: No coils	1: Keine Heiz-/Kühlregister	1: Pas de batterie	26-02-2024
20	2: Water Heating Coil (HCW)	2: Wasserheizregister (HCW)	2: atterie de chauffage à eau (HCW)	26-02-2024
21	3: Electric Heating Coil (HCE)	3: Elektroheizregister (HCE)	3: Batterie de chauffage électrique (HCE)	18-09-2025
22	4: Water Cooling Coil (CCW)	4: Wasserkühlregister (CCW)	4: Batterie de refroidissement à eau (CCW)	26-02-2024
23	5: Electric Pre-heater	5: Elektrovorheizregister	5: Batterie de chauffage préliminaire électrique	18-09-2025
24	6: HCW + CCW	6: HCW + CCW	6: HCW + CCW	26-02-2024
25	7: HCE + CCW	7: HCE + CCW	7: HCE + CCW	18-09-2025
26	8: Preheater + HCW	8: Vorheizregister + HCW	8: Préchauffeur + HCW	18-09-2025
27	9: Preheater + CCW	9: Vorheizregister + CCW	9: Préchauffeur + CCW	18-09-2025
28	10: Preheater + HCE	10: Vorheizregister + HCE	10: Préchauffeur + HCE	18-09-2025
29	11: Preheater + HCW + CCW	11: Vorheizregister + HCW + CCW	11: Préchauffeur + HCW + CCW	18-09-2025
30	11: Preheater + HCW + CCW	11: Vorheizregister + HCW + CCW	11: Préchauffeur + HCW + CCW	26-02-2024
31	12: Preheater + HCE + CCW	12: Vorheizregister + HCE + CCW	12: Préchauffeur + HCE + CCW	18-09-2025
32	12: Preheater + HCE + CCW	12: Vorheizregister + HCE + CCW	12: Préchauffeur + HCE + CCW	26-02-2024

Page	Title GB	Titel DE	Titre FR	Last edit
33	13: Change-Over CW (Combi-Coil)	13: Kombiregister	13: Batterie multifonction	26-02-2024
34	14: Preheater+Combi-Coil	14: Vorheizregister + Kombiregister	14: Préchauffeur + Batterie multifonction	18-09-2025
35	Optional accessories	Optionales Zubehör	Accessoires optionnels	26-02-2024
36	Optional accessories MODBUS	Optionales Zubehör MODBUS	Accessoires optionnels MODBUS	18-09-2025
40	Electric heaters	Elektroheizregister	Registre de chauffage électrique	22-12-2022
41	Electric heaters component overview	Komponentenübersicht für Elektroheizregister	Composants pour radiateurs électriques	27-02-2024
43	Electric pre-heater Step 1	Elektrovorheizung Stufe 1	Préchauffeur électrique Étapes 1	24-09-2025
44	Electric heater Step 1	Elektroheizung Stufe 1	Chauffage électrique Étapes 1	24-09-2025
45	Electric pre-heater Step 1 & 2	Elektrovorheizung Stufe 1 & 2	Préchauffeur électrique Étapes 1 et 2	24-09-2025
46	Electric heater Step 1 & 2	Elektroheizung Stufe 1 & 2	Chauffage électrique Étapes 1 et 2	24-09-2025
47	Carlo Gavazzi RG/Regin TTC25 conversion	Carlo Gavazzi RG/Regin TTC25 umbau	Conversion Carlo Gavazzi RG/Regin TTC25	18-03-2026

Identification of wires by colour

Main current:	Hauptstrom:	Courant principal:	400/230VAC
Phase:	Phase:	Phase :	BK
Neutral:	Neutral:	Neutre :	BU
Earth:	Erde:	Terre :	GNYE
Pilot current:	Steuerstrom:	Courant pilote:	230/24VAC
Phase:	Phase:	Phase :	RD
Neutral:	Neutral:	Neutre :	BU
Earth:	Erde:	Terre :	GNYE
Pilot current:	Steuerstrom:	Courant pilote:	24VDC
Positive (+):	Positiv (+):	Positif (+) :	RD
Negative (-):	Negativ (-):	Négatif (-) :	WH
Signals:	Signale:	Signaux:	
Temperature:	Temperatur:	Température :	WH
Dry contact:	Trockenkontakt:	Contact sec :	WH
Analog:	Analog:	Analogique :	WH
Digital:	Digital:	Numérique :	WH
Unknown potential:	Unbekanntes Potenzial:	Potentiel inconnu:	
All:	Alle:	Tout:	OG

Labelling of cables and cores (according to IEC 62491)

Method CR

Method	Description
0	No labelling
A	Use of designated cables or cores
R	Identification labelling by means of reference designation (including cable number)
CL	Local-end connection labelling
CR	**Remote-end connection labelling**
CB	Both-end connection labelling
S	Signal labelling

Methode	Beschreibung
0	Keine Kennzeichnung
A	Verwendung vorgesehener Kabel oder Adern
R	Identifikationskennzeichnung mittels Referenzbezeichnung (inkl. Kabelnummer)
CL	Kennzeichnung der lokalen Verbindung
CR	**Kennzeichnung der Remote-End-Verbindung**
CB	Beidseitige Anschlussbeschriftung
S	Signalbeschriftung

Méthode	Description
0	Pas d'étiquetage
A	Utilisation de câbles ou d'âmes désignés
R	Marquage d'identification au moyen d'une désignation de référence
CL	Étiquetage des connexions locales
CR	**Étiquetage des connexions distantes**
CB	Étiquetage des connexions aux deux extrémités
S	Étiquetage des signaux

Abbreviations of colours (according to IEC 60757)

Black	Schwarz	Noir	BK
Brown	Braun	Marron	BN
Red	Rot	Rouge	RD
Orange	Orange	Orange	OG
Yellow	Gelb	Jaune	YE
Green	Grün	Vert	GN
Blue	Blau	Bleu	BU
Light Blue	Hellblau	Bleu clair	BU
Violet	Violett	Violet	VT
Gray	Grau	Gris	GY
White	Weiß	Blanc	WH
Pink	Rosa	Rose	PK
Green/Yellow	Grün/Gelb	Vert/Jaune	GNYE

Language used in this document

Table of contents, standards, component overview and terminal functions are available in this document in English, German and French.
For other languages, see the electrical installation instructions.
The rest of the document is in English only.

Inhaltsverzeichnis, Normen, Komponentenübersicht und Terminalfunktionen sind in diesem Dokument in Englisch, Deutsch und Französisch verfügbar.
Weitere Sprachen finden Sie in der Elektroinstallationsanleitung.
Der Rest des Dokuments ist nur auf Englisch.

La table des matières, les normes, la présentation des composants et les fonctions du terminal sont disponibles dans ce document en anglais, allemand et français.
Pour les autres langues, voir les instructions d'installation électrique.
Le reste du document est uniquement en anglais.

How to find the component description:
So finden Sie die Komponentenbeschreibung:
Comment trouver la description du composant:

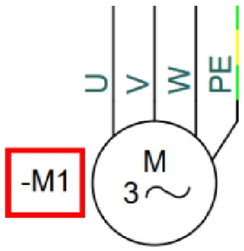

Supply fan

-K30	Extension modul (2)	Extensionmodul (2)	Module d'extension (2)
-M1	Supply fan	Zuluftventilator	Ventilateur d'air soufflé
-M2	Exhaust fan	Fortluftventilator	Ventilateur d'air rejeté

How to find the terminal description:
So finden Sie die Terminalbeschreibung:
Comment trouver la description du terminal :

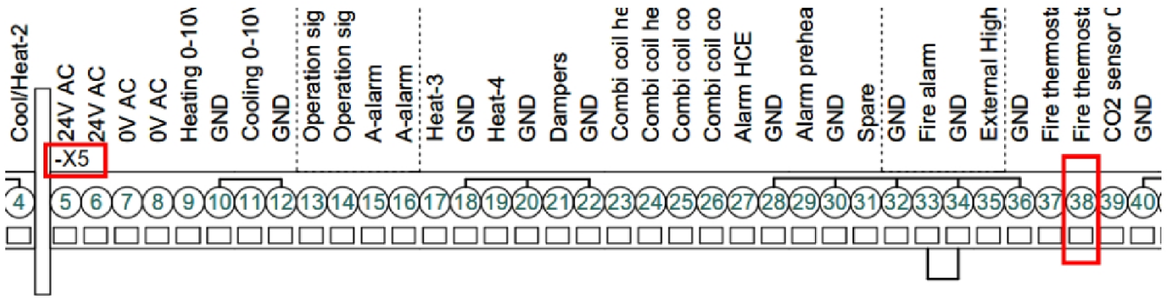

-X5:37	Fire thermostat 1	Feuerthermostat 1	Thermostat d'incendie 1
-X5:38	Fire thermostat 2	Feuerthermostat 2	Thermostat d'incendie 2
-X5:39	CO2 sensor 0-10V	CO2-Sensor 0-10V	Capteur CO2 0-10V

Manufactured by: EXHAUSTO	Project: CX3050 & CX3060 - With AFC	Start date:	24-08-2022	Constructor:	DKTSA	Page:	4.1
		Revision date:	18-03-2026	Approved by:	DKLEG	Previous page:	4
Drawing number: 0400103	Page Title: Quick guide for language matrix	Revision:	F	Scale:	1:1	Next page:	5
		Replaces revision:	E	Format:	A3	Pages in total:	48

Component	Product aspects (GB)	Produktaspekte (DE)	Aspects du produit (FR)
+A1	Control system panel	Automatiktafel	Tableau régulation
+A2	CX-unit	CX-Gerät	Appareil CX
+A3	Coil-box	Registerbox	Bloc batterie de chauffage
+A4	Customer accessory	Kundenzubehör	Accessoires client
-BG1	PIR sensor	PIR-Sensor	Capteur PIR
-BQ1	CO2 sensor	CO2-Sensor	Sonde CO2
-BQ2	Air quality sensor	Luftqualitätssensor	Capteur de qualité de l'air
-E1	Electrical post-heater	Elektronachheizregister	Batterie de chauffage électrique, post-chauffage
-E2	Electrical pre-heater	Elektrovorheizregister	Batterie de chauffage électrique, pré-&#13&#10chauffage
-E3	Combi-coil	Kombiregister	Batterie multifonction
-F1	Fuse for Main supply	Hauptsicherung	Fusible pour le tableau régulation
-F2	Fuse for EXcon Master	Sicherung für EXcon Master	Fusible pour le EXcon Master
-F3	Fuse for external connections	Sicherung für externen Anschluss	Fusible pour raccordement externe
-F4	Fuse for Supply fan	Sicherung für Zuluftventilator	Fusible pour ventilateur d'air soufflé
-F5	Fuse for Exhaust fan	Sicherung für Fortluftventilator	Fusible pour ventilateur d'air rejeté
-K1	EXcon Master	EXcon Master	EXcon Master
-K27	Extension modul (1)	Extensionmodul (1)	Module d'extension (1)
-K30	Extension modul (2)	Extensionmodul (2)	Module d'extension (2)
-M1	Supply fan	Zuluftventilator	Ventilateur d’air soufflé
-M2	Exhaust fan	Fortluftventilator	Ventilateur d’air rejeté
-M3	Bypass motor	Bypassmotor	Moteur de by-pass
-M4	Circulation pump HCW	Zirkulationspumpe Wasserheizregister	Pompe de circulation Batterie de chauffage à eau
-M5	Circulation pump CCW	Zirkulationspumpe Wasserkühlregister	Pompe de circulation Batterie de refroidissement à&#13&#10eau
-M6	Circulation pump Combi-coil	Zirkulationspumpe Kombiregister	Pompe de circulation Batterie multifonction
-M7	Outdoor air damper	Außenluftklappe	Registre d'air extérieur
-M8	Outdoor air damper	Außenluftklappe	Registre d'air extérieur
-P1	Measures pressure over the heat exchanger	Druckmessung über den Gegenstromwärmetauscher	Mesure de la pression au niveau de l'échangeur
-P2	Supply airflow and extract filter pressure	Luftmengenmessung Zuluft und Filterüberwachung Abluft	Mesure de la pression, du niveau de débit d'air et de la température
-P3	Extract airflow and outdoorfilter pressure	Luftmengenmessung Abluft und Filterüberwachung Außenluft	Mesure de la pression, du niveau de débit d'air et de la température

Component	Product aspects (GB)	Produktaspekte (DE)	Aspects du produit (FR)
-P4	Constant pressure regulation supply air	Konstantdruckmessung Zuluft	Régulation de pression constante, air soufflé
-P5	Constant pressure regulation extract air	Konstantdruckmessung Abluft	Régulation de pression constante, air extrait
-P6	Filter box supply air	Zuluftfilterkasten	Boîte de filtration air soufflé
-PH1	HMI standard	Standard Bedienteil 35"	IHM du poste de commande standard
-PH2	HMI option	Optionales Bedienteil 20"	IHM du poste de commande des options
-S1	Main switch	Hauptschalter	Interrupteur principal
-T1	Power supply 230VAC/2x24VDC	Spannungsversorgung 230VAC/2x24VDC	Transformateur 230VAC/2x24VAC
-TE1.1	Extract air temperature	Ablufttemperatursensor	Température de l’air extrait
-TE1.2	Exhaust air temperature	Fortlufttemperatursensor	Température d’air rejeté
-TE2.1	Outdoor air temperature	Außenlufttemperatursensor	Température extérieure
-TE2.1-PRE	Outdoor air temperature (Pre-heater)	Außenlufttemperatursensor (Vorheizregister)	Température extérieure (préchauffage)
-TE2.2	Supply air temperature	Zulufttemperatursensor	Température de l’air soufflé
-TE-OT	Outdoor temperature	Außen temperatursensor	Température extérieure
-TE-RPT	Clamp-on temp. sensor RPT HCW	Anlegesensor Rücklauf Wasserheizregister	Température d'alimentation de la batterie de refroidissement à eau
-TE-RPT-CC	Clamp-on temp. sensor RPT Combi-Co	Anlegesensor Rücklauf Kombiregister	Température de retour de la batterie multifonction
-TE-RT	Room temperature	Raumtemperatursensor	Température ambiante
-TE-SPT	Clamp-on temp. sensor SPT CCW	Anlegesensor Rücklauf Kaltwassersatz	Température de retour de la Batterie de chauffage à eau
-W1	Main power supply cable	Kabel Spannungsversorgung	Câble d'alimentation principale
-X1	Terminals for Main supply	Anschlußklemmen für Spannungsversorgung	Bornier pour l'alimentation principale
-X1_EXT(2)	Terminals for Coil-box	Anschlußklemmen für Registerbox	Bornier pour bloc batterie de chauffage
-X2	Terminals for fans	Anschlußklemmen für Ventilatoren	Bornier pour les ventilateurs
-X3	Terminal for fuses 24V	Anschlußklemmen für Sicherung 24V	Bornier pour les fusibles 24V
-X4	Terminals for Circulation pumps 230V	Anschlußklemmen für Zirkulationspumpen 230V	Bornier pour les pompes de circulation 230V
-X5	Terminals for External customer connections	Anschlußklemmen für externen Anschluss	Bornier pour raccordement externe
-X6	Terminals for External customer connections	Anschlußklemmen für externen Anschluss	Bornier pour raccordement externe
-X_BP	Plug bypass motor	Anschluss für Bypassmotor	Prise de moteur by-pass
-X_FAN EX	Plug Exhaust fan	Anschluss für Abluftventilator	Prise de ventilateur d’air extrait
-X_FAN SU	Plug Supply fan	Anschluss für Zuluftventilator	Prise de ventilateur d'air soufflé
-X_M1	Plug Supply fan	Anschluss für Zuluftventilator	Prise de ventilateur d'air soufflé

Component	Product aspects (GB)	Produktaspekte (DE)	Aspects du produit (FR)
-X_M2	Plug Supply fan	Anschluss für Zuluftventilator	Prise de ventilateur d'air soufflé
-X_RJ12.1	Modbus T-split	Modbus T-Splitter	Dérivation en T Modbus
-X_RJ12.3	Modbus T-split	Modbus T-splitter	Dérivation en T Modbus
-X_RJ12.4	Modbus connector	Modbus-Anschluss	Connecteur Modbus
-X_RJ12.5	Modbus connector	Modbus-Anschluss	Connecteur Modbus
-Y1	Valve HCW	Ventil Wasserheizregister	Soupape Batterie de chauffage à eau
-Y2	Valve CCW	Ventil Wasserkühlregister	Soupape, batterie de refroidissement&#13&#10à eau
-Y3	Valve Combi-coil	Ventil Kombiregister	Soupape, batterie multifunctions

Terminal	Function (GB)	Funktion (DE)	Fonction (FR)
-X5:1	Cool/Heat-1	Kühlen/Heizen-1	Refroidissement/Chauffage-1
-X5:2	Cool/Heat-1	Kühlen/Heizen-1	Refroidissement/Chauffage-1
-X5:3	Cool/Heat-2	Kühlen/Heizen-2	Refroidissement/Chauffage-2
-X5:4	Cool/Heat-2	Kühlen/Heizen-2	Refroidissement/Chauffage-2
-X5:5	24V AC	24 V Wechselstrom	24 V CA
-X5:6	24V AC	24 V Wechselstrom	24 V CA
-X5:7	0V AC	0 V Wechselstrom	0 V CA
-X5:8	0V AC	0 V Wechselstrom	0 V CA
-X5:9	Heating 0-10V	Heizung 0-10V	Chauffage 0-10V
-X5:10	GND	GND	GND
-X5:11	Cooling 0-10V	Kühlung 0-10V	Refroidissement 0-10V
-X5:12	GND	GND	GND
-X5:13	Operation signal	Betriebssignal	Signal de fonctionnement
-X5:14	Operation signal	Betriebssignal	Signal de fonctionnement
-X5:15	A-alarm	A-Alarm	Alarme A
-X5:16	A-alarm	A-Alarm	Alarme A
-X5:17	Heat-3	Hitze-3	Chaleur-3
-X5:18	GND	GND	GND
-X5:19	Heat-4	Hitze-4	Chaleur-4
-X5:20	GND	GND	GND
-X5:21	Dampers	Dämpfer	Amortisseurs
-X5:22	GND	GND	GND
-X5:23	Combi coil heat	Kombi-Spulenheizung	Chauffage à serpentin combiné
-X5:24	Combi coil heat	Kombi-Spulenheizung	Chauffage à serpentin combiné
-X5:25	Combi coil cool	Kombispule cool	Batterie combinée froide
-X5:26	Combi coil cool	Kombispule cool	Batterie combinée froide
-X5:27	Alarm HCE	Alarm HCE	Alarme HCE
-X5:28	GND	GND	GND
-X5:29	Alarm preheater	Alarmvorwärmer	Préchauffeur d'alarme
-X5:30	GND	GND	GND
-X5:31	Spare	Nicht benutzt	Non utilisé
-X5:32	GND	GND	GND
-X5:33	Fire alarm	Feueralarm	Alarme incendie
-X5:34	GND	GND	GND
-X5:35	External High Speed	Externe hohe Geschwindigkeit	Haute vitesse externe
-X5:36	GND	GND	GND
-X5:37	Fire thermostat 1	Feuerthermostat 1	Thermostat d'incendie 1
-X5:38	Fire thermostat 2	Feuerthermostat 2	Thermostat d'incendie 2
-X5:39	CO2 sensor 0-10V	CO2-Sensor 0-10V	Capteur CO2 0-10V
-X5:40	GND	GND	GND
-X5:41	PT1000-1	PT1000-1	PT1000-1
-X5:42	GND	GND	GND
-X5:43	PT1000-2	PT1000-2	PT1000-2
-X5:44	GND	GND	GND
-X5:45	Supply air temp.	Zulufttemp.	Température de l'air soufflé.
-X5:46	GND	GND	GND

Terminal	Function (GB)	Funktion (DE)	Fonction (FR)
-X1_EXT(2):1	Circulation pump HCW	Umwälzpumpe HCW	Pompe de circulation HCW
-X1_EXT(2):2	Neutral	Neutral	Neutre
-X1_EXT(2):3	Circulation pump CCW	Umwälzpumpe CCW	Pompe de circulation CCW
-X1_EXT(2):4	Neutral	Neutral	Neutre
-X1_EXT(2):5	EXT Heating 0-10V	EXT Heizung 0-10V	Chauffage EXT 0-10V
-X1_EXT(2):6	GND	GND	GND
-X1_EXT(2):7	EXT Cooling 0-10V	EXT Kühlung 0-10V	Refroidissement EXT 0-10V
-X1_EXT(2):8	GND	GND	GND
-X1_EXT(2):9	Temperature RPT HCW	Temperatur RPT HCW	Température RPT HCW
-X1_EXT(2):10	GND	GND	GND
-X1_EXT(2):11	Temperatue SPT CCW	Temperatur SPT CCW	Température SPT CCW
-X1_EXT(2):12	GND	GND	GND
-X1_EXT(2):13	24 VAC	24 VAC	24 VCA
-X1_EXT(2):14	GND	GND	GND
-X1_EXT(2):15	24 VAC	24 VAC	24 VCA
-X1_EXT(2):16	0 VAC	0 VAC	0 VCA

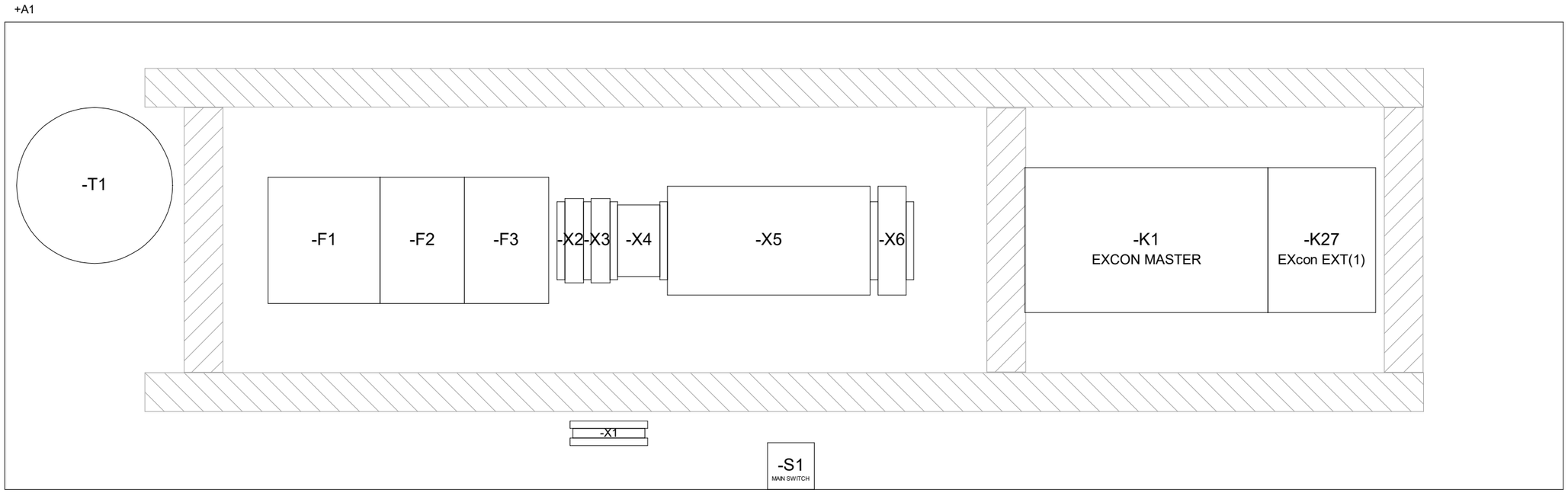

Produktaspekte auf Seite 5 bis 7 und Terminalfunktionen Seite 8 und 9
Aspects produits aux pages 5 à 7 et fonctions du terminal aux pages 8 et 9

Manufactured by:	Project:	Start date:	24-08-2022	Constructor:	DKTSA	Page:	10
EXHAUSTO	CX3050 & CX3060 - With AFC	Revision date:	18-03-2026	Approved by:	DKLEG	Previous page:	9
Drawing number:	Page Title:	Revision:	F	Scale:	1:3	Next page:	11
0400103	E-box lay-out	Replaces revision:	E	Format:	A3	Pages in total:	48

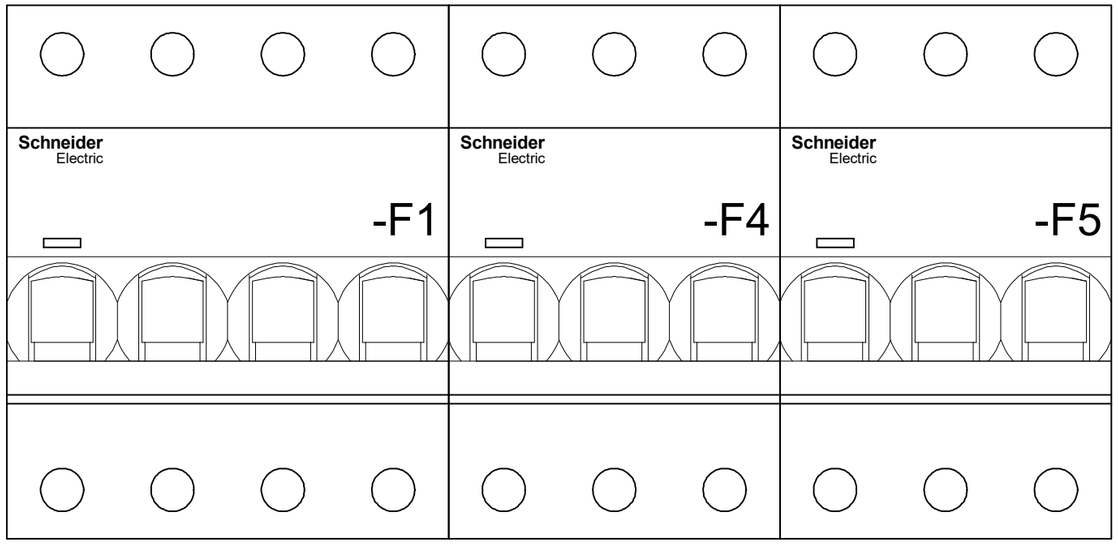

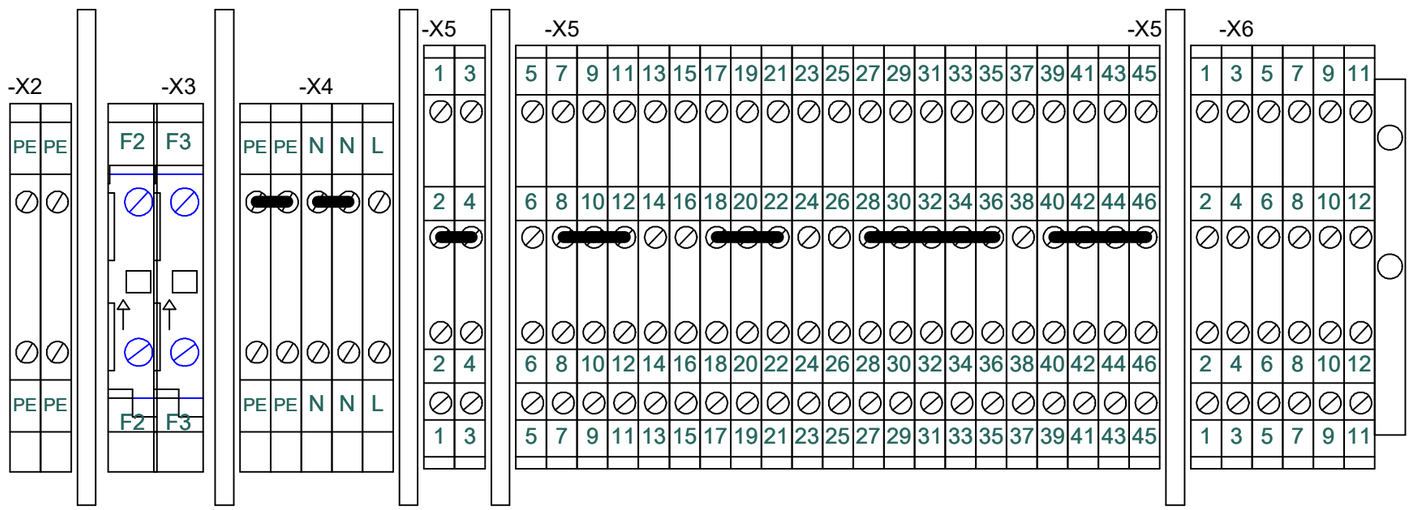

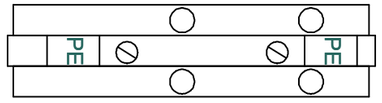

Produktaspekte auf Seite 5 bis 7 und Terminalfunktionen Seite 8 und 9
Aspects produits aux pages 5 à 7 et fonctions du terminal aux pages 8 et 9

Manufactured by: EXHAUSTO	Project: CX3050 & CX3060 - With AFC	Start date:	24-08-2022	Constructor:	DKTSA	Page:	11
		Revision date:	18-03-2026	Approved by:	DKLEG	Previous page:	10
Drawing number: 0400103	Page Title: Fuses & Terminals	Revision:	F	Scale:	1:1	Next page:	12
		Replaces revision:	E	Format:	A3	Pages in total:	48

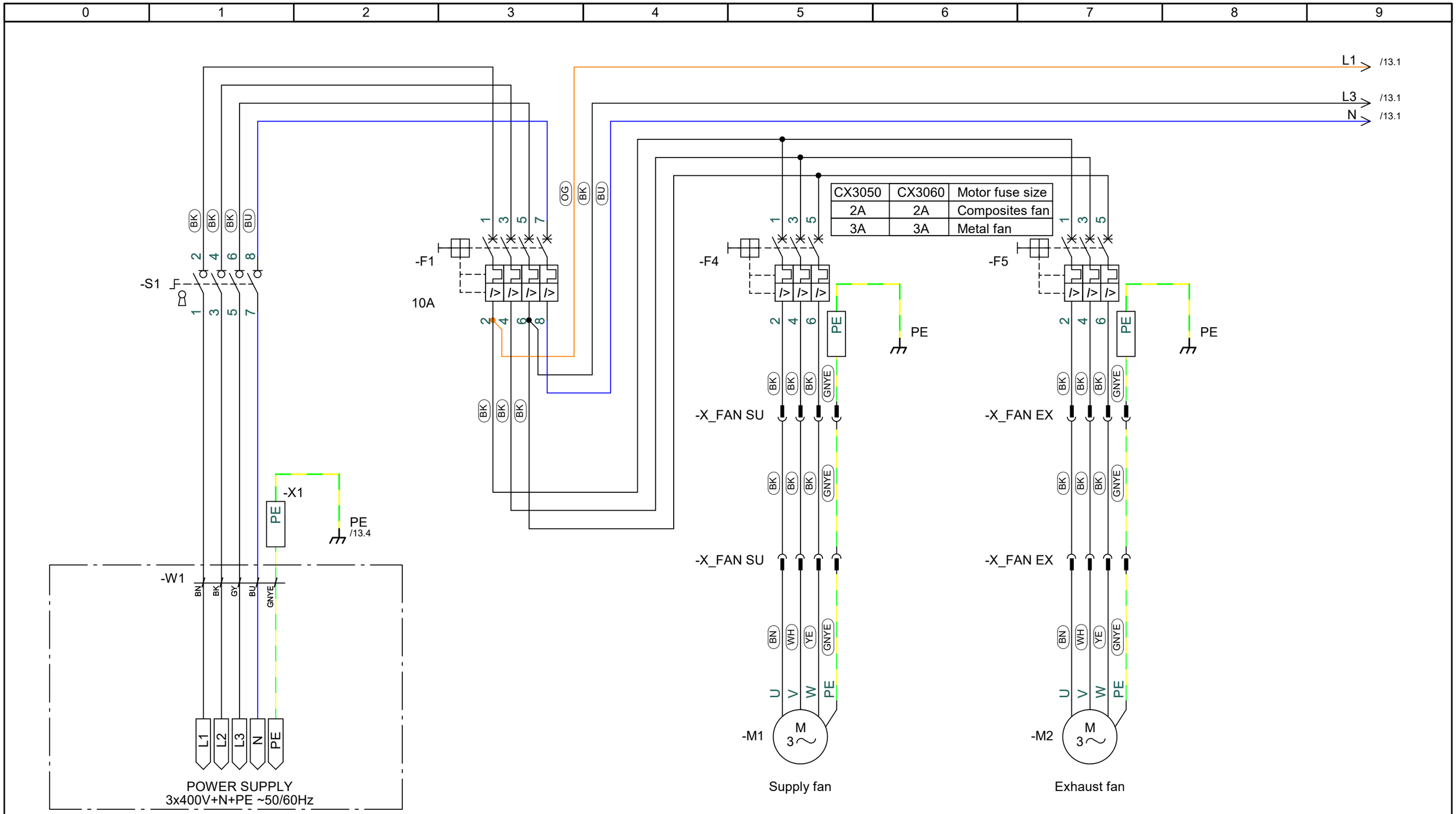

CX3050	CX3060	Motor fuse size
2A	2A	Composites fan
3A	3A	Metal fan

Produktaspekte auf Seite 5 bis 7 und Terminalfunktionen Seite 8 und 9
Aspects produits aux pages 5 à 7 et fonctions du terminal aux pages 8 et 9

Manufactured by: EXHAUSTO	Project: CX3050 & CX3060 - With AFC	Start date: 24-08-2022	Constructor: DKTSA	Page: 12
		Revision date: 18-03-2026	Approved by: DKLEG	Previous page: 11
Drawing number: 0400103	Page Title: Main power circuits	Revision: F	Scale: 1:1	Next page: 13
		Replaces revision: E	Format: A3	Pages in total: 48

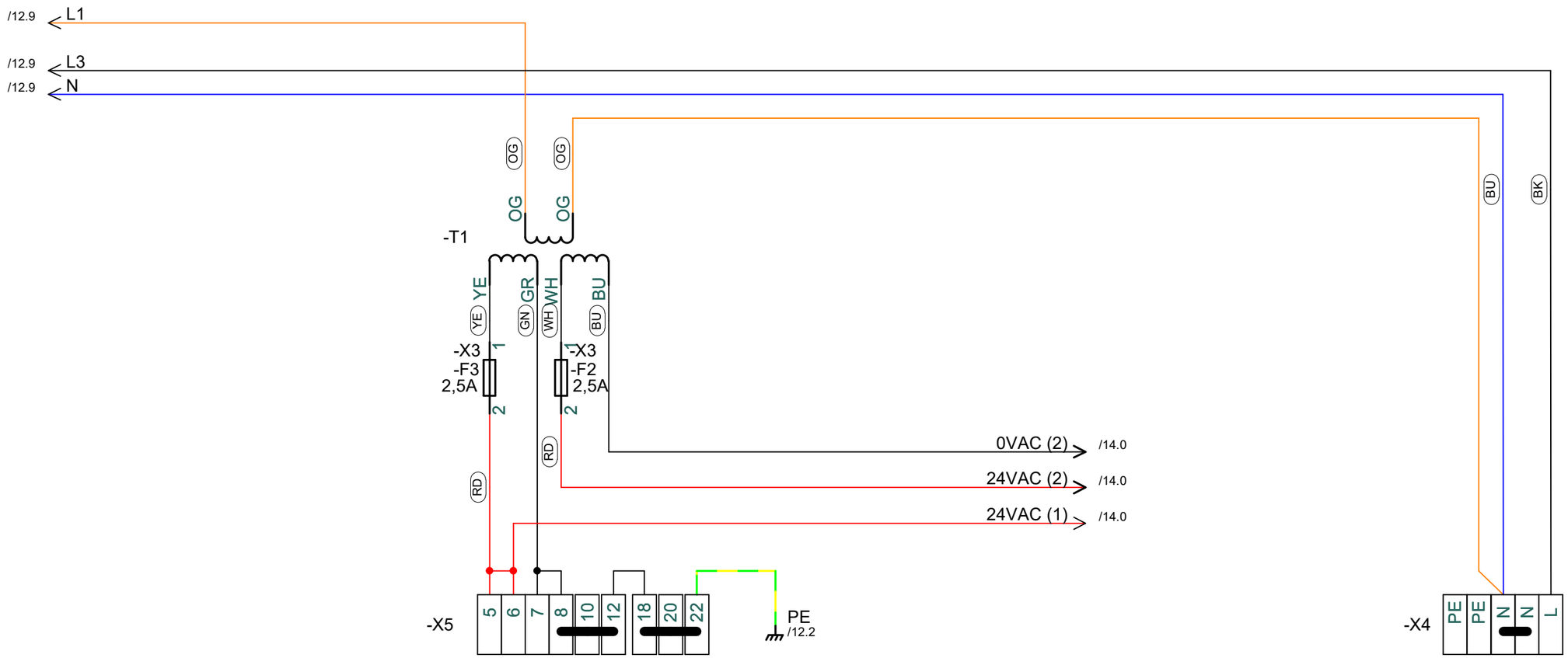

Produktaspekte auf Seite 5 bis 7 und Terminalfunktionen Seite 8 und 9
Aspects produits aux pages 5 à 7 et fonctions du terminal aux pages 8 et 9

Manufactured by: EXHAUSTO	Project: CX3050 & CX3060 - With AFC	Start date:	24-08-2022	Constructor:	DKTSA	Page:	13
		Revision date:	18-03-2026	Approved by:	DKLEG	Previous page:	12
Drawing number: 0400103	Page Title: Main power circuits	Revision:	F	Scale:	1:1	Next page:	14
		Replaces revision:	E	Format:	A3	Pages in total:	48

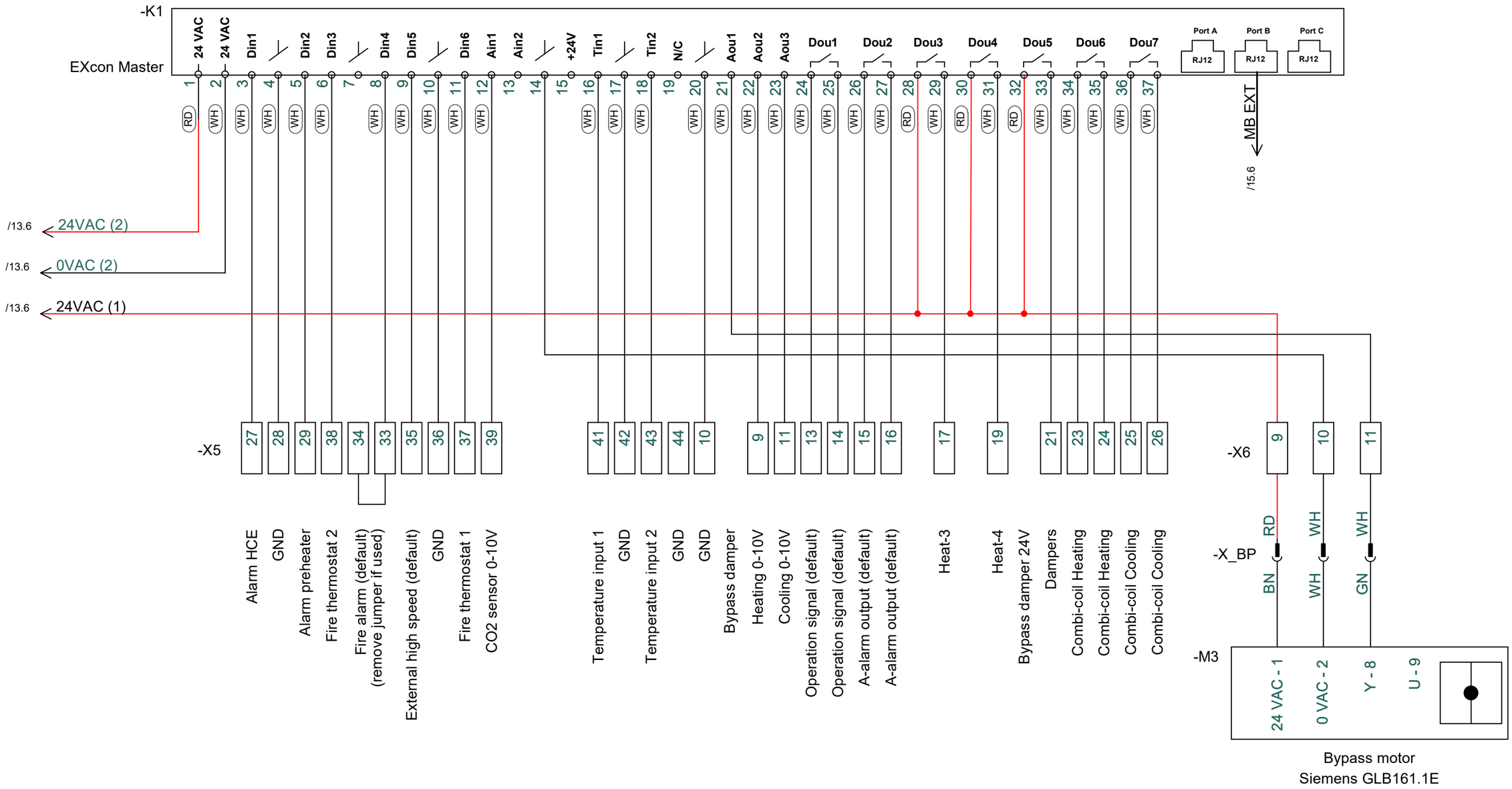

Produktaspekte auf Seite 5 bis 7 und Terminalfunktionen Seite 8 und 9
Aspects produits aux pages 5 à 7 et fonctions du terminal aux pages 8 et 9

Manufactured by: EXHAUSTO	Project: CX3050 & CX3060 - With AFC	Start date:	24-08-2022	Constructor:	DKTSA	Page: 14
		Revision date:	18-03-2026	Approved by:	DKLEG	Previous page: 13
Drawing number: 0400103	Page Title: Wiring EXcon Master	Revision:	F	Scale:	1:1	Next page: 15
		Replaces revision:	E	Format:	A3	Pages in total: 48

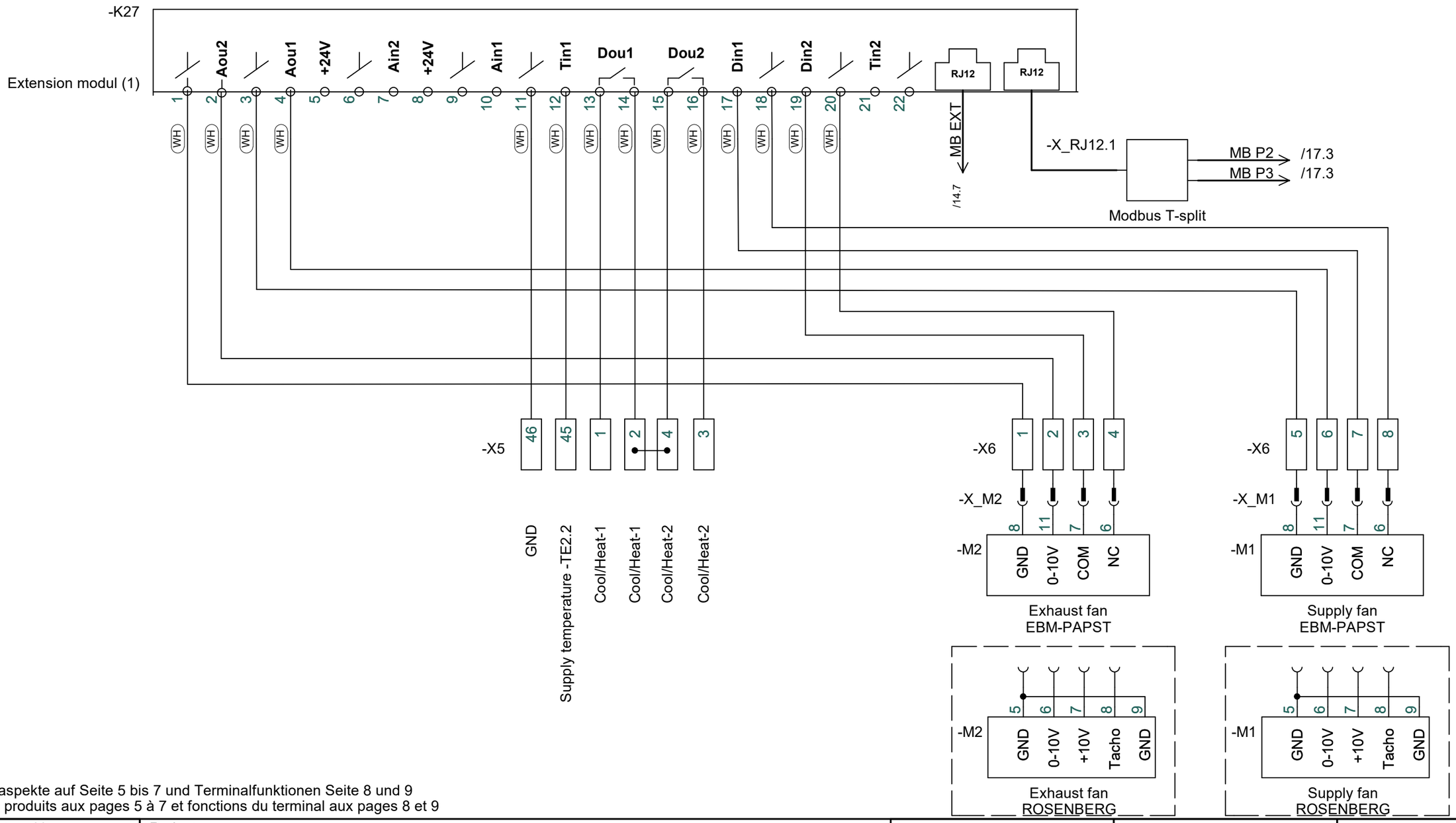

Produktaspekte auf Seite 5 bis 7 und Terminalfunktionen Seite 8 und 9
Aspects produits aux pages 5 à 7 et fonctions du terminal aux pages 8 et 9

Manufactured by: EXHAUSTO	Project: CX3050 & CX3060 - With AFC	Start date:	24-08-2022	Constructor:	DKTSA	Page: 15
		Revision date:	18-03-2026	Approved by:	DKLEG	Previous page: 14
Drawing number: 0400103	Page Title: Wiring EXT module (1)	Revision:	F	Scale:	1:1	Next page: 16
		Replaces revision:	E	Format:	A3	Pages in total: 48

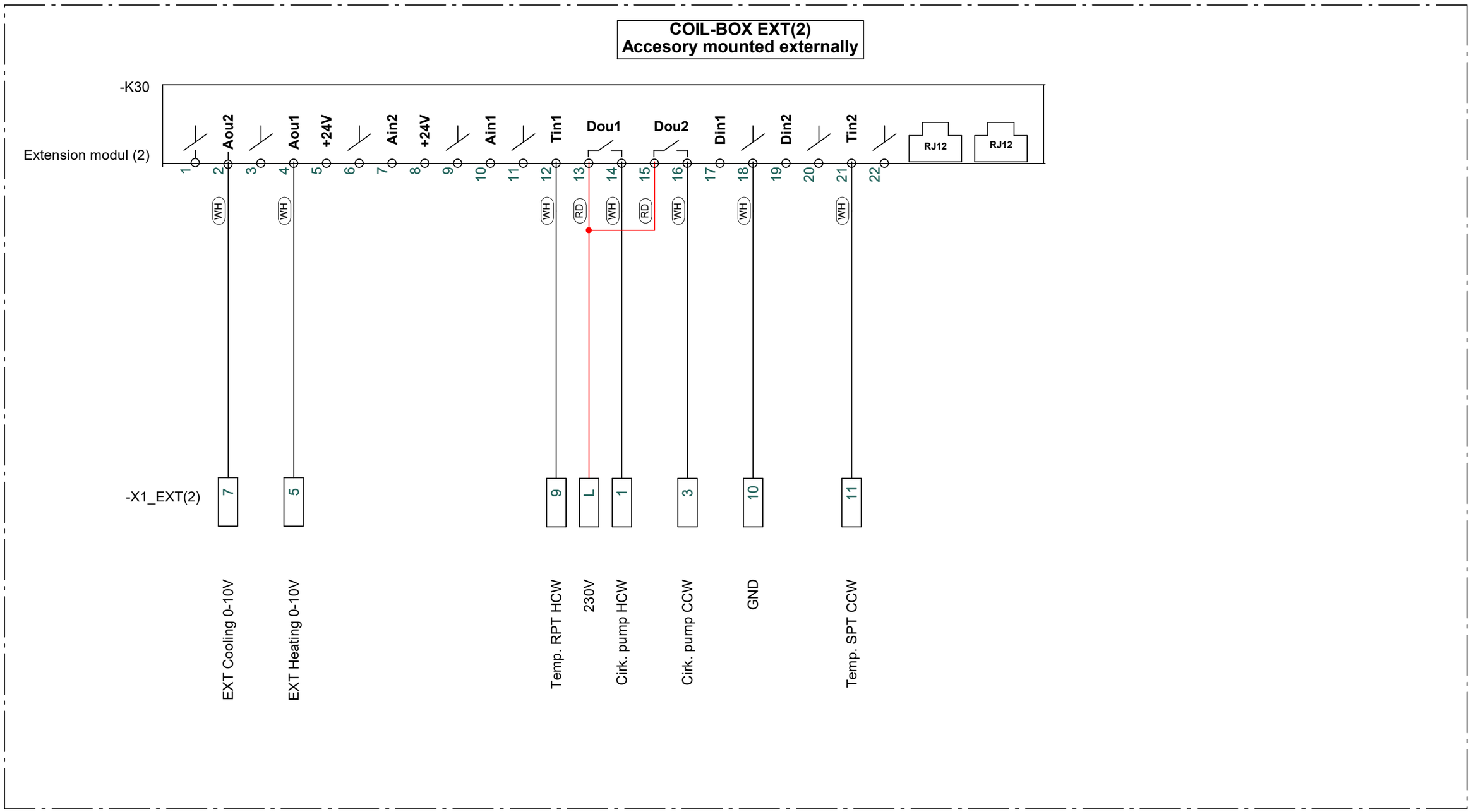

Produktaspekte auf Seite 5 bis 7 und Terminalfunktionen Seite 8 und 9
Aspects produits aux pages 5 à 7 et fonctions du terminal aux pages 8 et 9

Manufactured by: EXHAUSTO	Project: CX3050 & CX3060 - With AFC	Start date:	24-08-2022	Constructor:	DKTSA	Page:	16
		Revision date:	18-03-2026	Approved by:	DKLEG	Previous page:	15
Drawing number: 0400103	Page Title: Wiring EXT module (2)	Revision:	F	Scale:	1:1	Next page:	17
		Replaces revision:	E	Format:	A3	Pages in total:	48

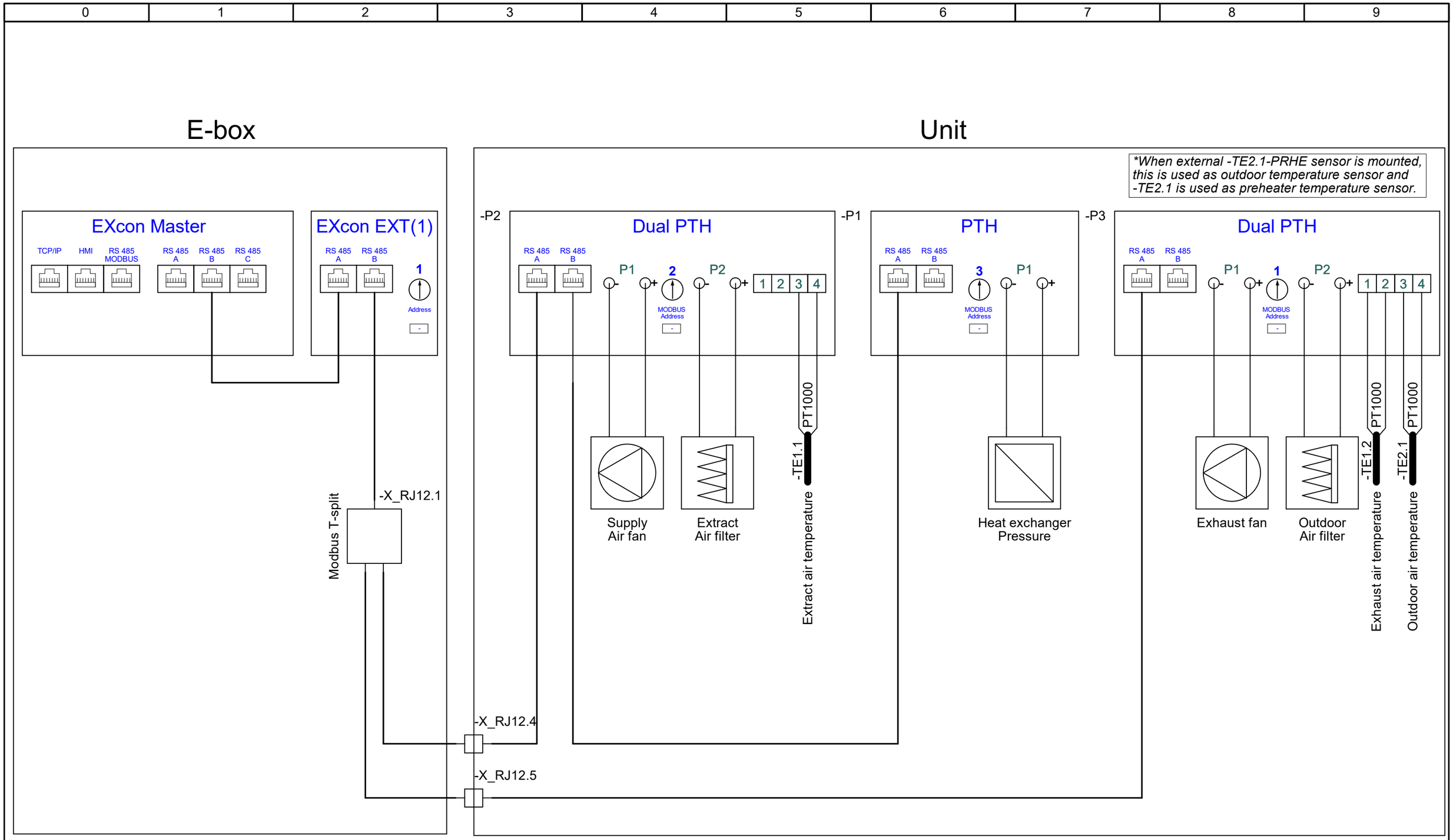

Manufactured by: EXHAUSTO	Project: CX3050 & CX3060 - With AFC	Start date:	24-08-2022	Constructor:	DKTSA	Page: 17
		Revision date:	18-03-2026	Approved by:	DKLEG	Previous page: 16
Drawing number: 0400103	Page Title: PTH connections	Revision:	F	Scale:	1:1	Next page: 18
		Replaces revision:	E	Format:	A3	Pages in total: 48

Configurations

Manufactured by: EXHAUSTO	Project: CX3050 & CX3060 - With AFC	Start date:	24-08-2022	Constructor:	DKTSA	Page:	18
		Revision date:	18-03-2026	Approved by:	DKLEG	Previous page:	17
Drawing number: 0400103	Page Title: Configurations	Revision:	F	Scale:	1:1	Next page:	19
		Replaces revision:	E	Format:	A3	Pages in total:	48

Configuration 1: No Coils

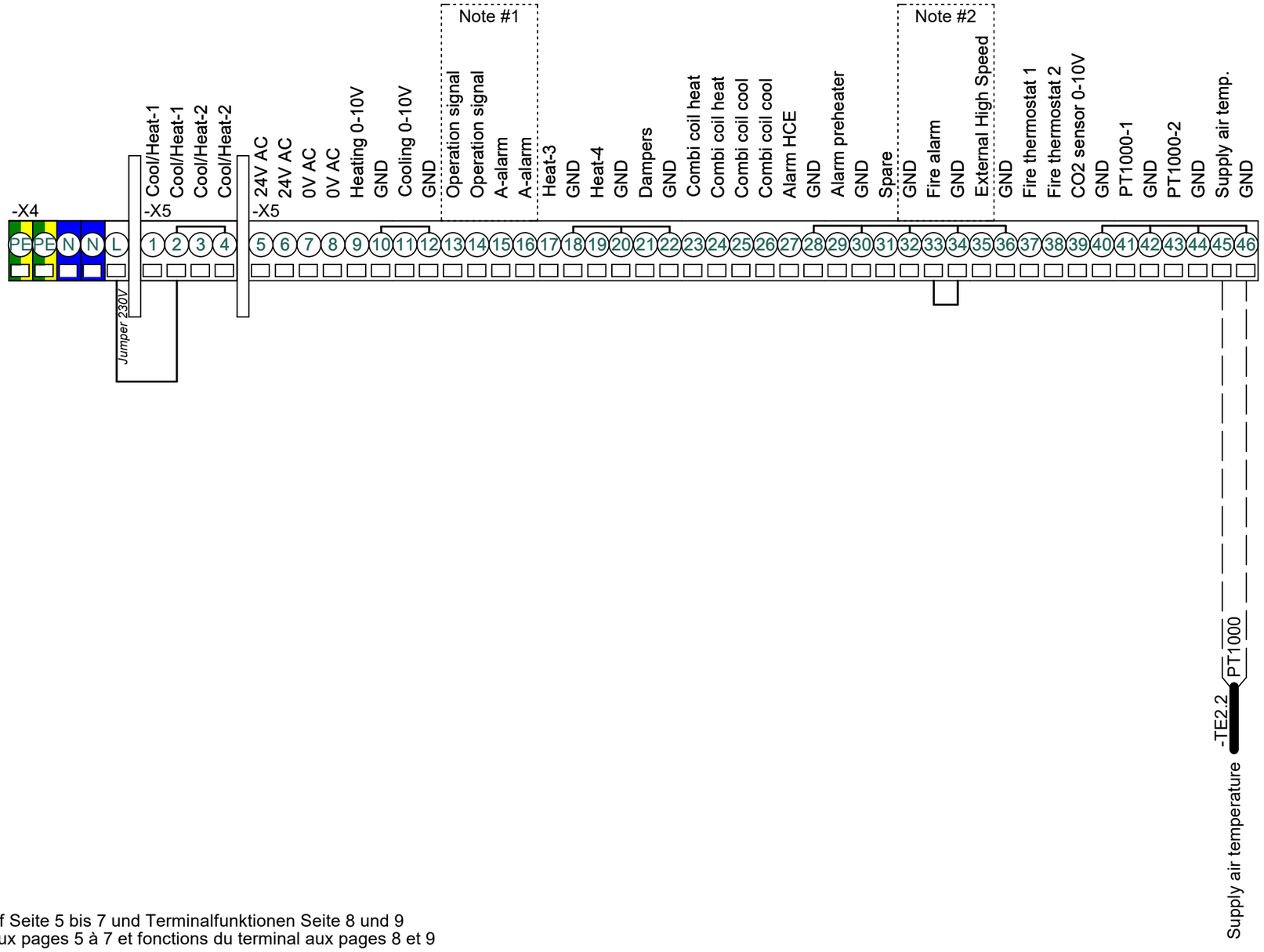

Note #1
Default configuration.
Can be changed to:
- B-alarm output
- Alarm reset
- Summer operation
- Summer night cooling

Note #2
Default configuration.
Can be changed to:
- AHU STOP
- Low speed
- Medium speed
- Frost alarm
- External start
- External reset alarms

If used remove jumper

** Supply air temperature sensor must be mounted in supply air duct after heating and cooling coils*

Produktaspekte auf Seite 5 bis 7 und Terminalfunktionen Seite 8 und 9
Aspects produits aux pages 5 à 7 et fonctions du terminal aux pages 8 et 9

Manufactured by: EXHAUSTO	Project: CX3050 & CX3060 - With AFC	Start date:	24-08-2022	Constructor:	DKTSA	Page:	19
		Revision date:	18-03-2026	Approved by:	DKLEG	Previous page:	18
Drawing number: 0400103	Page Title: 1: No coils	Revision:	F	Scale:	1:1	Next page:	20
		Replaces revision:	E	Format:	A3	Pages in total:	48

Configuration 2: Water Heating Coil

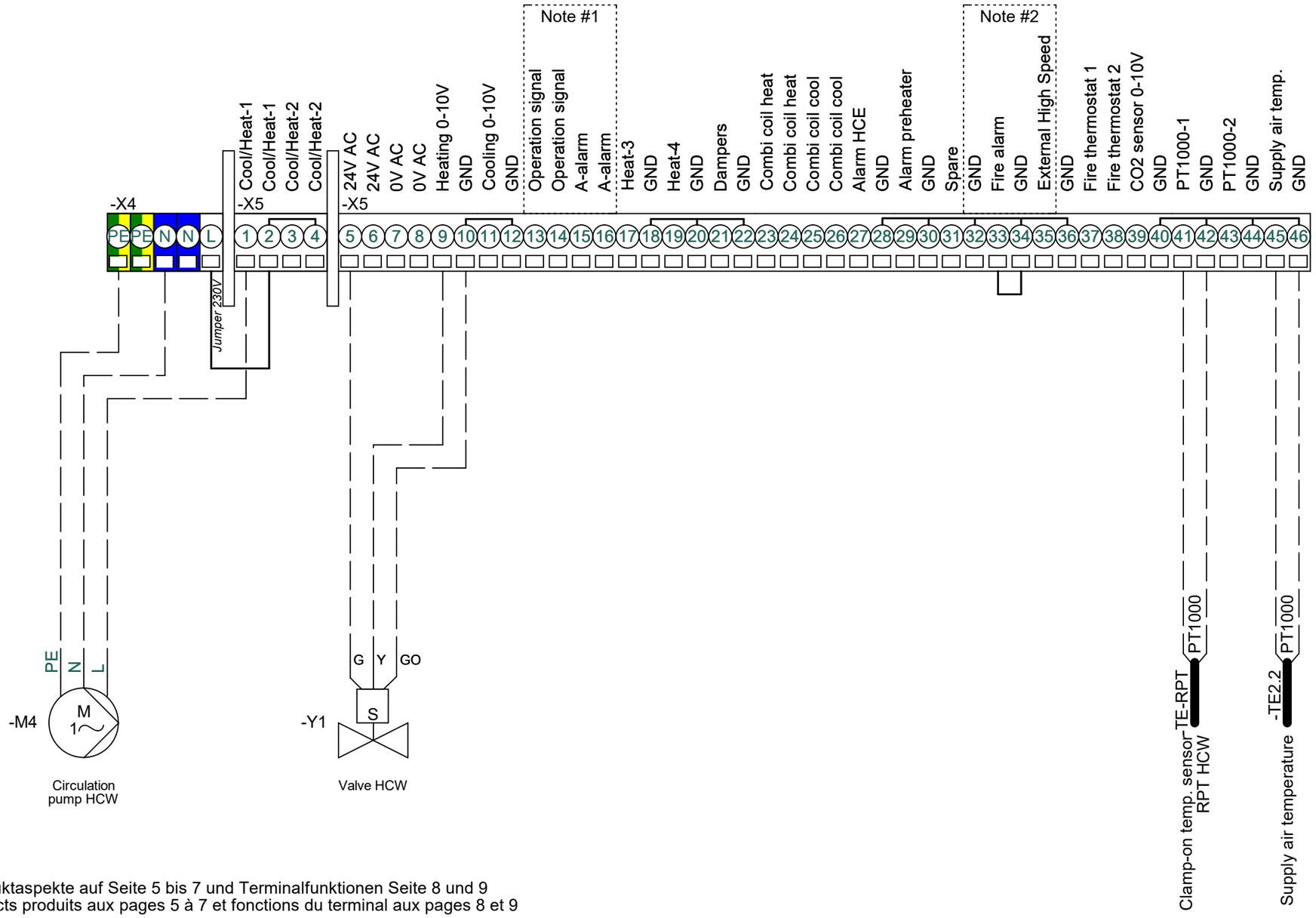

Note #1
Default configuration.
Can be changed to:
- B-alarm output
- Alarm reset
- Summer operation
- Summer night cooling

Note #2
Default configuration.
Can be changed to:
- AHU STOP
- Low speed
- Medium speed
- Frost alarm
- External start
- External reset alarms

If used remove jumper

** Supply air temperature sensor must be mounted in supply air duct after heating and cooling coils*

Produktaspekte auf Seite 5 bis 7 und Terminalfunktionen Seite 8 und 9
Aspects produits aux pages 5 à 7 et fonctions du terminal aux pages 8 et 9

Manufactured by:	Project:	Start date:	24-08-2022	Constructor:	DKTSA	Page:	20
EXHAUSTO	CX3050 & CX3060 - With AFC	Revision date:	18-03-2026	Approved by:	DKLEG	Previous page:	19
Drawing number:	Page Title:	Revision:	F	Scale:	1:1	Next page:	21
0400103	2: Water Heating Coil (HCW)	Replaces revision:	E	Format:	A3	Pages in total:	48

Configuration 3: Electric Heating Coil

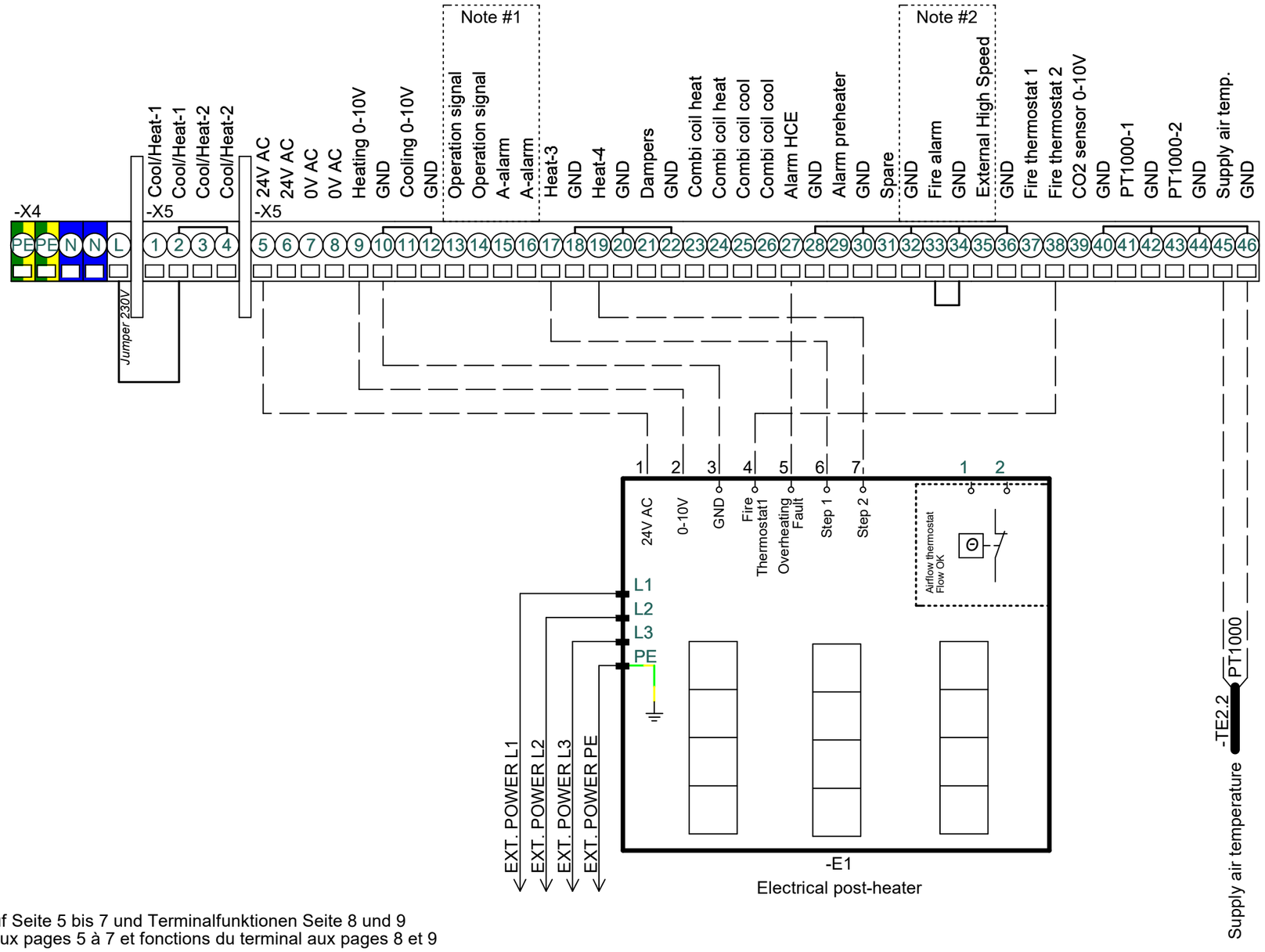

Note #1
Default configuration.
Can be changed to:
- B-alarm output
- Alarm reset
- Summer operation
- Summer night cooling

Note #2
Default configuration.
Can be changed to:
- AHU STOP
- Low speed
- Medium speed
- Frost alarm
- External start
- External reset alarms

If used remove jumper

** Heater Step 2 are only used in the high performance heaters*

** Supply air temperature sensor must be mounted in supply air duct after heating and cooling coils*

Produktaspekte auf Seite 5 bis 7 und Terminalfunktionen Seite 8 und 9
Aspects produits aux pages 5 à 7 et fonctions du terminal aux pages 8 et 9

Manufactured by: EXHAUSTO	Project: CX3050 & CX3060 - With AFC	Start date:	24-08-2022	Constructor:	DKTSA	Page:	21
		Revision date:	18-03-2026	Approved by:	DKLEG	Previous page:	20
Drawing number: 0400103	Page Title: 3: Electric Heating Coil (HCE)	Revision:	F	Scale:	1:1	Next page:	22
		Replaces revision:	E	Format:	A3	Pages in total:	48

Configuration 4: Water Cooling Coil

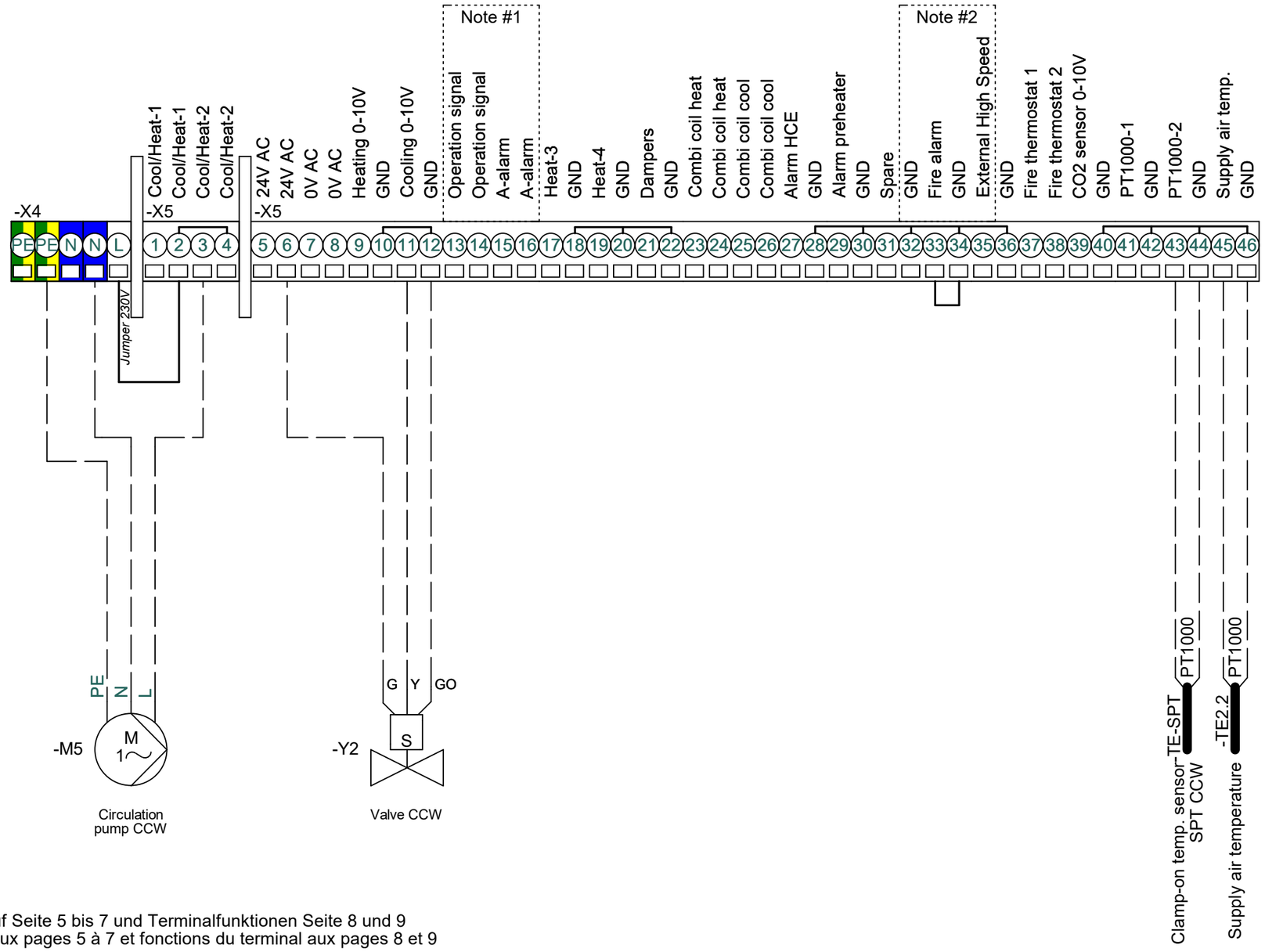

Note #1
Default configuration.
Can be changed to:
- B-alarm output
- Alarm reset
- Summer operation
- Summer night cooling

Note #2
Default configuration.
Can be changed to:
- AHU STOP
- Low speed
- Medium speed
- Frost alarm
- External start
- External reset alarms

If used remove jumper

** Supply air temperature sensor must be mounted in supply air duct after heating and cooling coils*

Produktaspekte auf Seite 5 bis 7 und Terminalfunktionen Seite 8 und 9
Aspects produits aux pages 5 à 7 et fonctions du terminal aux pages 8 et 9

Manufactured by: EXHAUSTO	Project: CX3050 & CX3060 - With AFC	Start date:	24-08-2022	Constructor:	DKTSA	Page: 22
		Revision date:	18-03-2026	Approved by:	DKLEG	Previous page: 21
Drawing number: 0400103	Page Title: 4: Water Cooling Coil (CCW)	Revision:	F	Scale:	1:1	Next page: 23
		Replaces revision:	E	Format:	A3	Pages in total: 48

Configuration 5: Electric Pre-heater

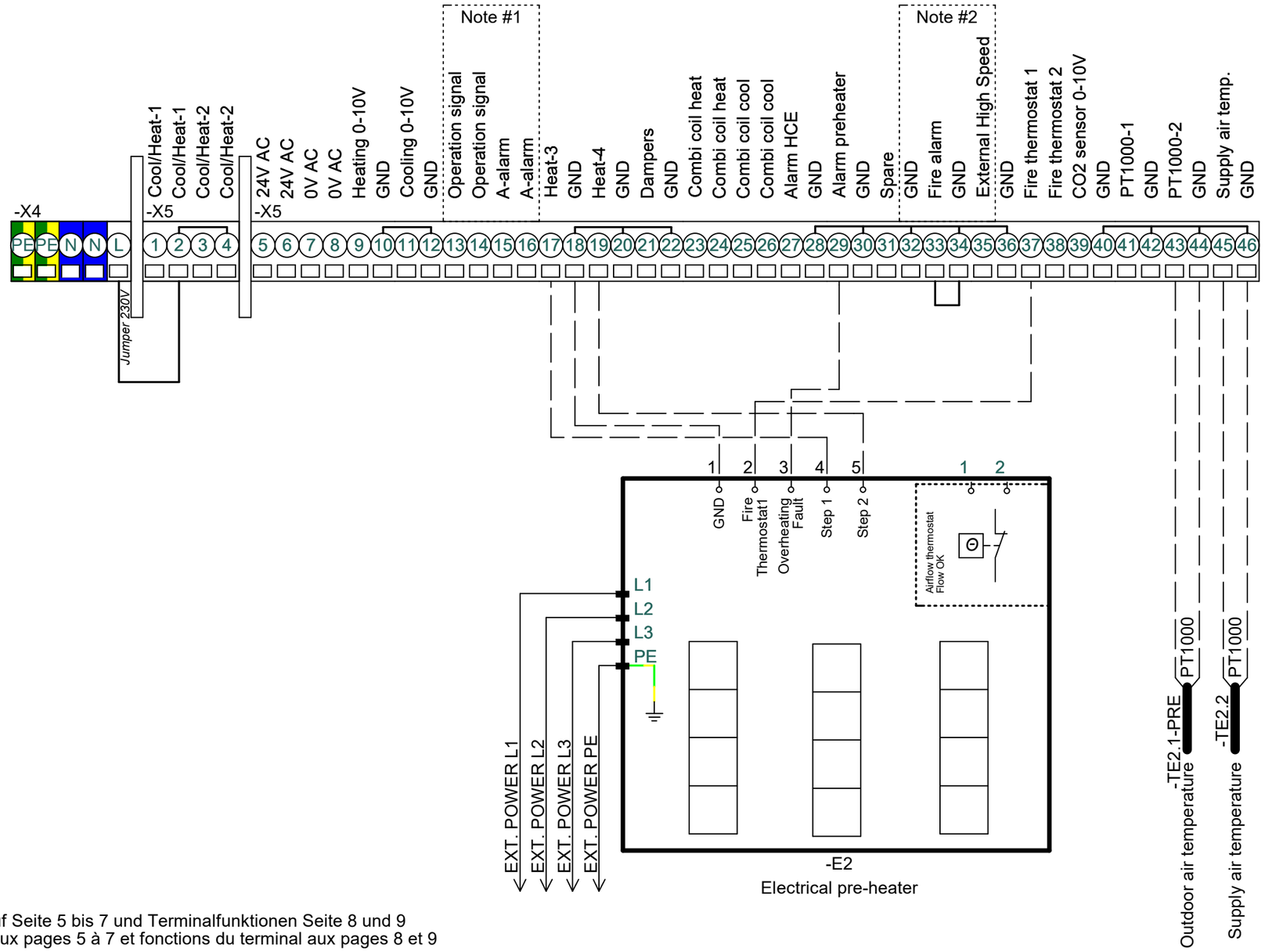

Note #1
Default configuration.
Can be changed to:
- B-alarm output
- Alarm reset
- Summer operation
- Summer night cooling

Note #2
Default configuration.
Can be changed to:
- AHU STOP
- Low speed
- Medium speed
- Frost alarm
- External start
- External reset alarms

If used remove jumper

** Heater Step 2 are only used in the high performance heaters*

** Outdoor air temperature sensor must be mounted in the outside air duct, before the preheating coil.*

** Supply air temperature sensor must be mounted in supply air duct after heating and cooling coils*

Produktaspekte auf Seite 5 bis 7 und Terminalfunktionen Seite 8 und 9
Aspects produits aux pages 5 à 7 et fonctions du terminal aux pages 8 et 9

Manufactured by: EXHAUSTO	Project: CX3050 & CX3060 - With AFC	Start date:	24-08-2022	Constructor:	DKTSA	Page:	23
		Revision date:	18-03-2026	Approved by:	DKLEG	Previous page:	22
Drawing number: 0400103	Page Title: 5: Electric Pre-heater	Revision:	F	Scale:	1:1	Next page:	24
		Replaces revision:	E	Format:	A3	Pages in total:	48

Configuration 6: Water Heating Coil + Water cooling coil

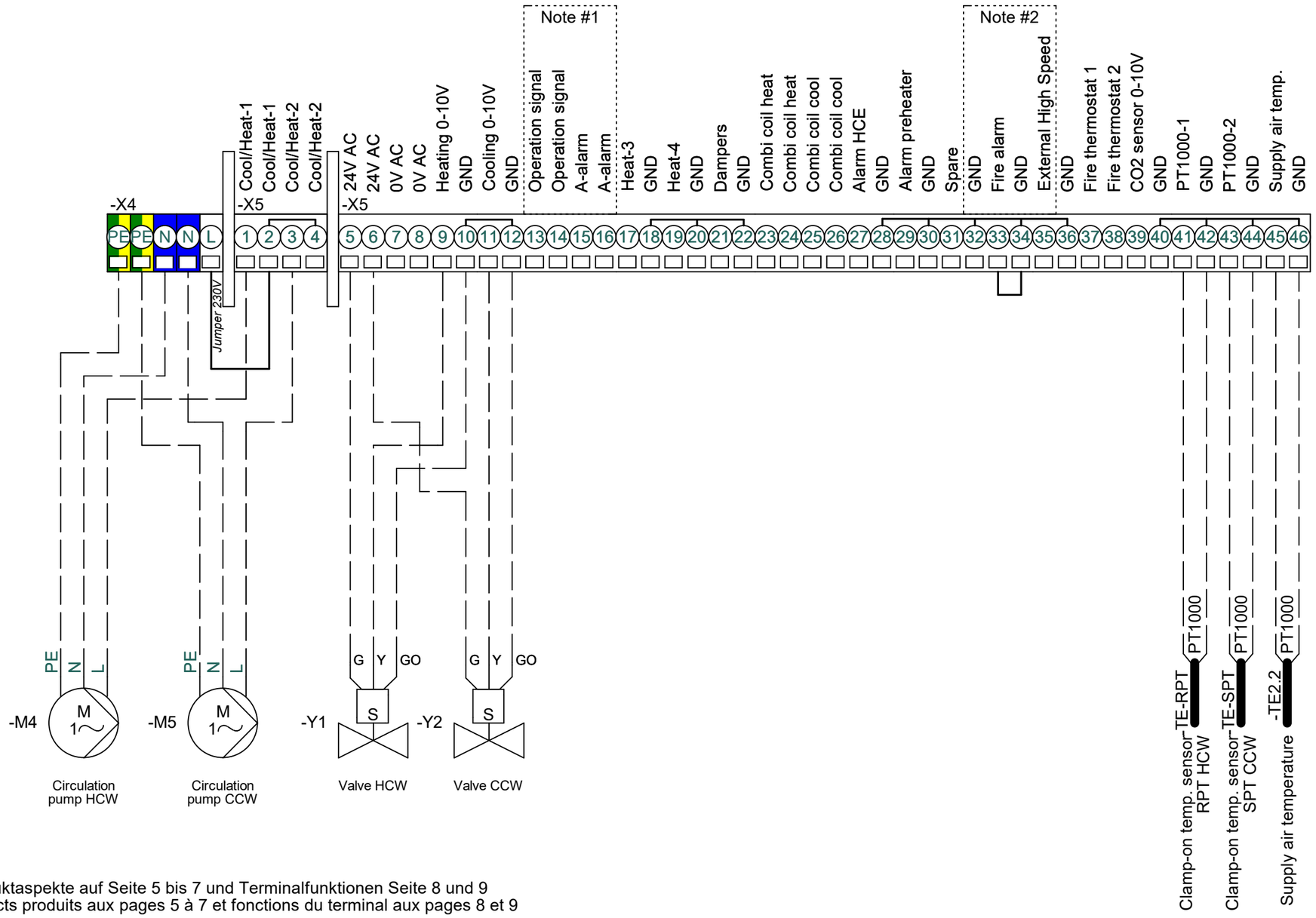

Note #1
Default configuration.
Can be changed to:
- B-alarm output
- Alarm reset
- Summer operation
- Summer night cooling

Note #2
Default configuration.
Can be changed to:
- AHU STOP
- Low speed
- Medium speed
- Frost alarm
- External start
- External reset alarms

If used remove jumper

** Supply air temperature sensor must be mounted in supply air duct after heating and cooling coils*

Produktaspekte auf Seite 5 bis 7 und Terminalfunktionen Seite 8 und 9
Aspects produits aux pages 5 à 7 et fonctions du terminal aux pages 8 et 9

Manufactured by: EXHAUSTO	Project: CX3050 & CX3060 - With AFC	Start date:	24-08-2022	Constructor:	DKTSA	Page: 24
		Revision date:	18-03-2026	Approved by:	DKLEG	Previous page: 23
Drawing number: 0400103	Page Title: 6: HCW + CCW	Revision:	F	Scale:	1:1	Next page: 25
		Replaces revision:	E	Format:	A3	Pages in total: 48

Connections configuration 7: Electric Heating Coil + Water Cooling Coil

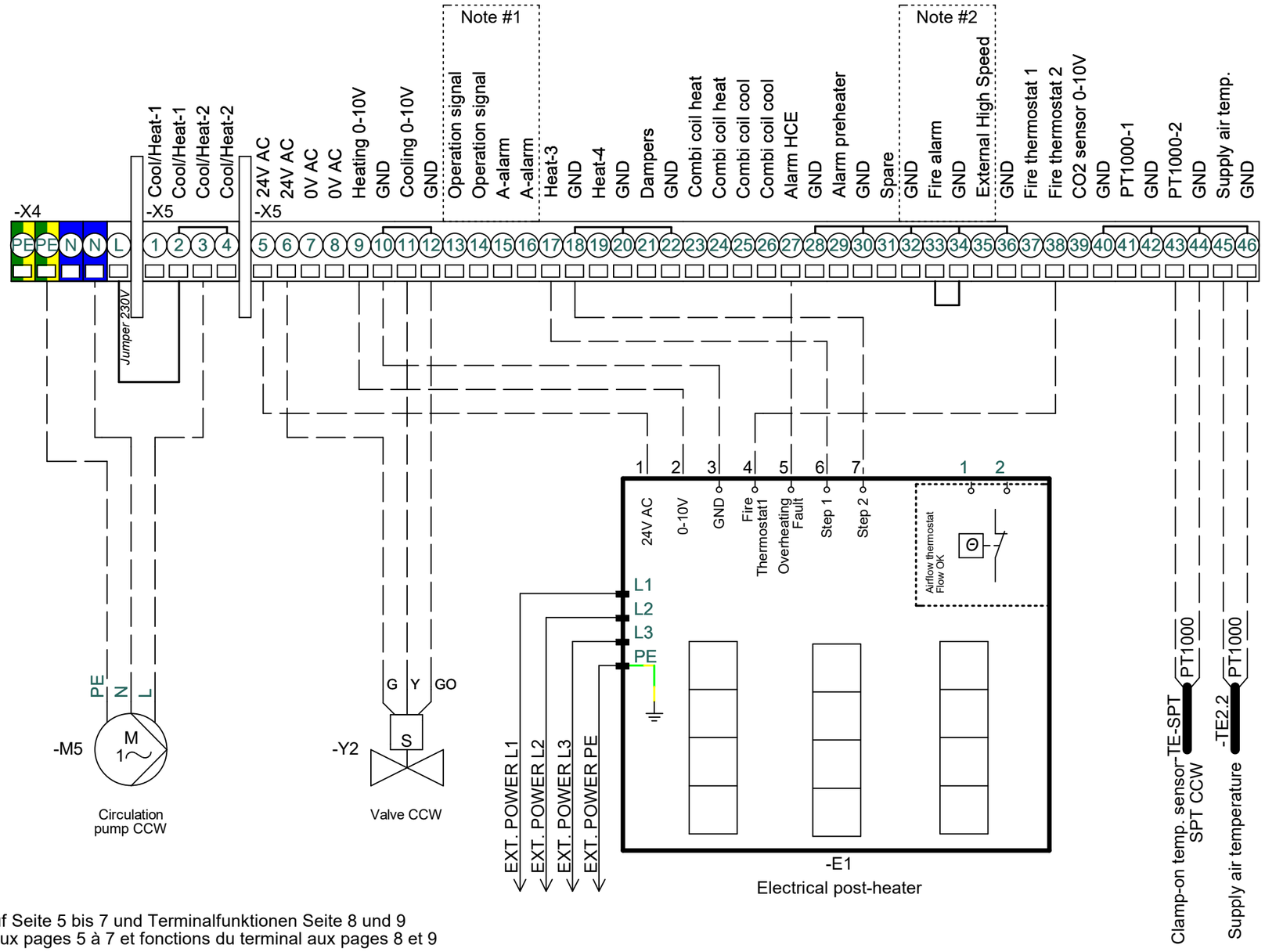

Note #1
Default configuration.
Can be changed to:
- B-alarm output
- Alarm reset
- Summer operation
- Summer night cooling

Note #2
Default configuration.
Can be changed to:
- AHU STOP
- Low speed
- Medium speed
- Frost alarm
- External start
- External reset alarms

If used remove jumper

** Heater Step 2 are only used in the high performance heaters*

** Supply air temperature sensor must be mounted in supply air duct after heating and cooling coils*

Produktaspekte auf Seite 5 bis 7 und Terminalfunktionen Seite 8 und 9
Aspects produits aux pages 5 à 7 et fonctions du terminal aux pages 8 et 9

Manufactured by: EXHAUSTO	Project: CX3050 & CX3060 - With AFC	Start date:	24-08-2022	Constructor:	DKTSA	Page:	25
		Revision date:	18-03-2026	Approved by:	DKLEG	Previous page:	24
Drawing number: 0400103	Page Title: 7: HCE + CCW	Revision:	F	Scale:	1:1	Next page:	26
		Replaces revision:	E	Format:	A3	Pages in total:	48

Connections configuration 8: Electric Preheating Coil + Water Heating Coil

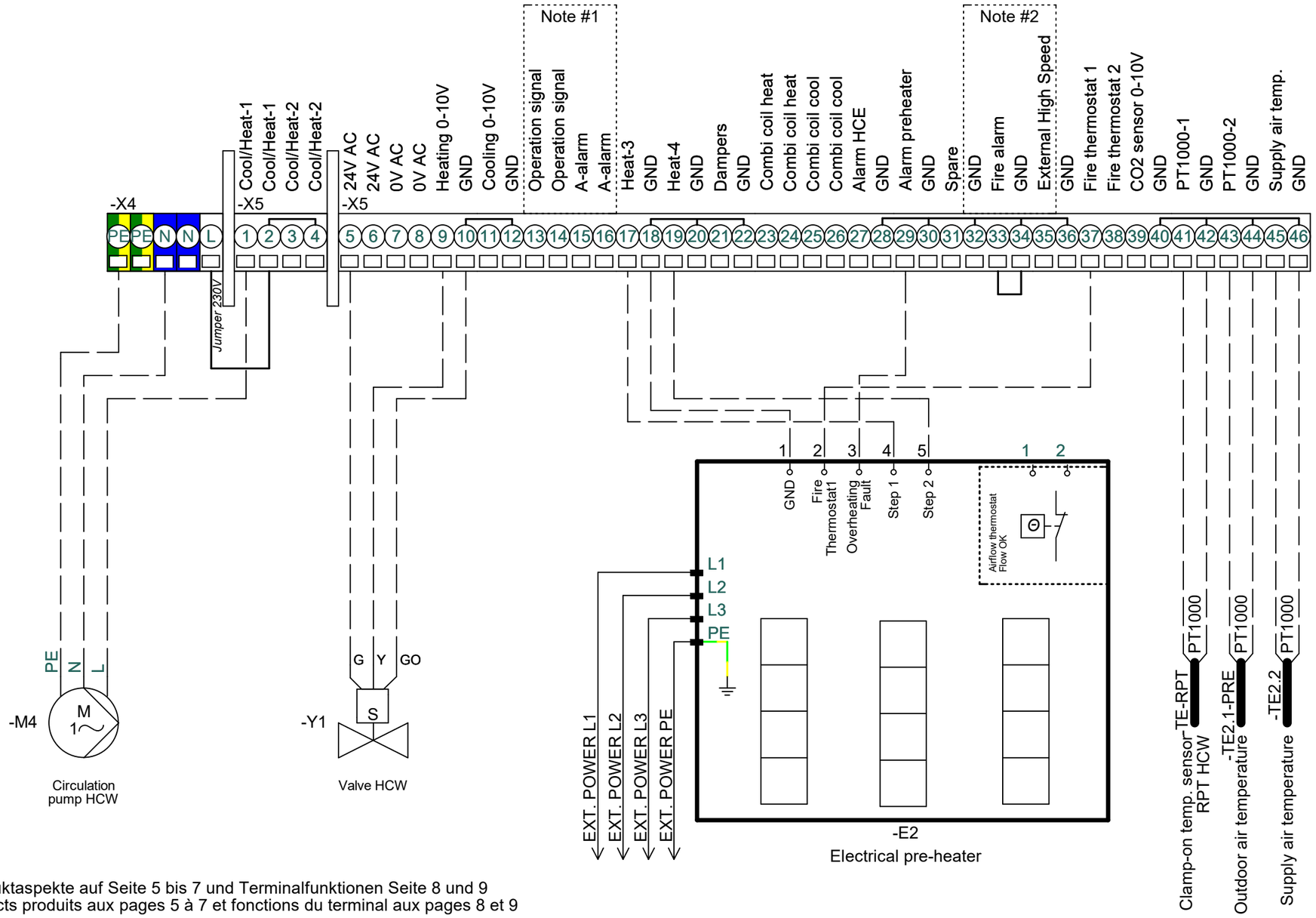

Note #1
Default configuration.
Can be changed to:
- B-alarm output
- Alarm reset
- Summer operation
- Summer night cooling

Note #2
Default configuration.
Can be changed to:
- AHU STOP
- Low speed
- Medium speed
- Frost alarm
- External start
- External reset alarms

If used remove jumper

** Heater Step 2 are only used in the high performance heaters*

** Outdoor air temperature sensor must be mounted in the outside air duct, before the preheating coil.*

** Supply air temperature sensor must be mounted in supply air duct after heating and cooling coils*

Produktaspekte auf Seite 5 bis 7 und Terminalfunktionen Seite 8 und 9
Aspects produits aux pages 5 à 7 et fonctions du terminal aux pages 8 et 9

Manufactured by: EXHAUSTO	Project: CX3050 & CX3060 - With AFC	Start date:	24-08-2022	Constructor:	DKTSA	Page: 26
		Revision date:	18-03-2026	Approved by:	DKLEG	Previous page: 25
Drawing number: 0400103	Page Title: 8: Preheater + HCW	Revision:	F	Scale:	1:1	Next page: 27
		Replaces revision:	E	Format:	A3	Pages in total: 48

Connections configuration 9: Electric Preheating Coil + Water Cooling Coil

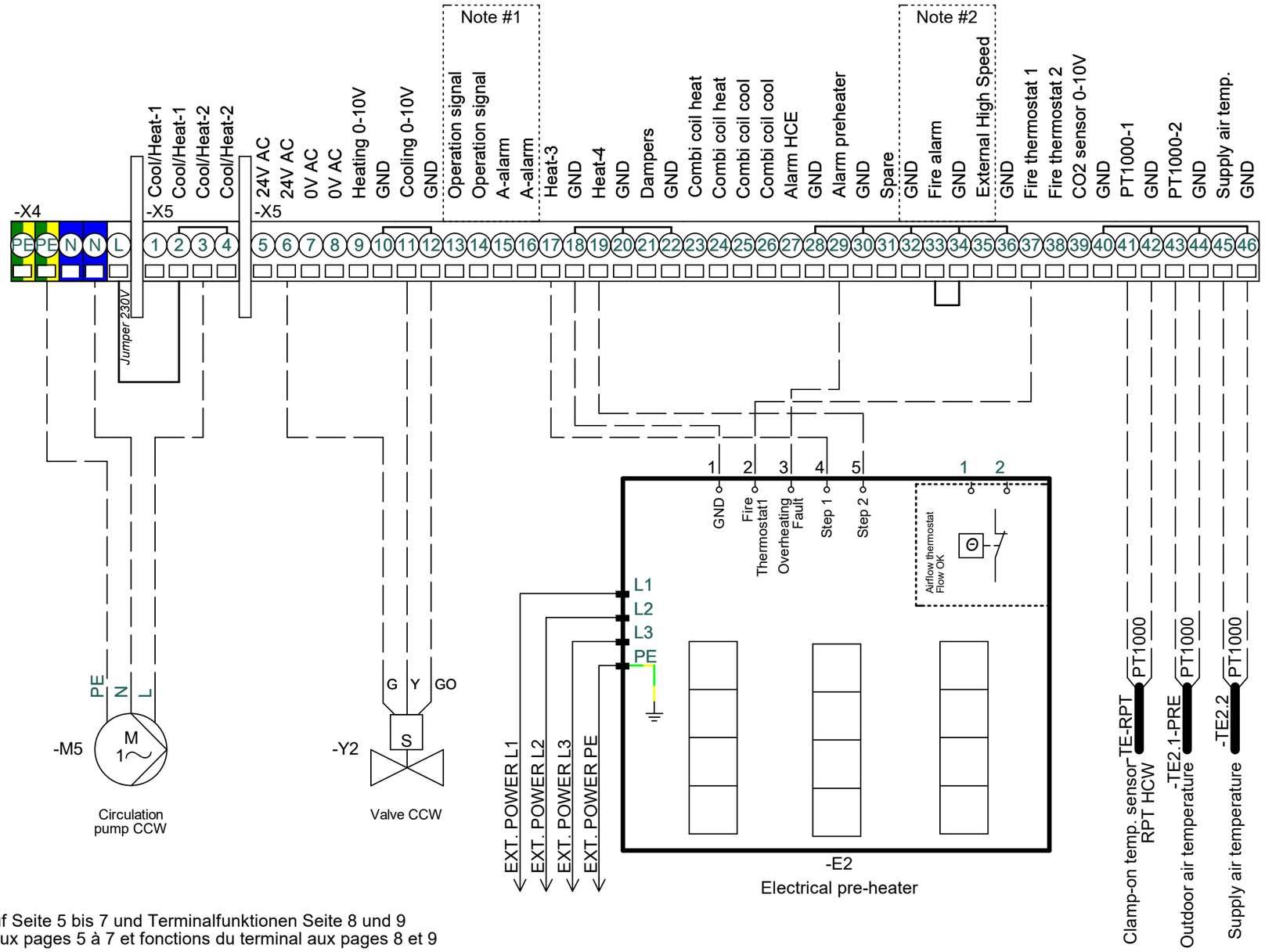

Note #1
Default configuration.
Can be changed to:
- B-alarm output
- Alarm reset
- Summer operation
- Summer night cooling

Note #2
Default configuration.
Can be changed to:
- AHU STOP
- Low speed
- Medium speed
- Frost alarm
- External start
- External reset alarms

If used remove jumper

** Heater Step 2 are only used in the high performance heaters*

** Outdoor air temperature sensor must be mounted in the outside air duct, before the preheating coil.*

** Supply air temperature sensor must be mounted in supply air duct after heating and cooling coils*

Produktaspekte auf Seite 5 bis 7 und Terminalfunktionen Seite 8 und 9
Aspects produits aux pages 5 à 7 et fonctions du terminal aux pages 8 et 9

Manufactured by: EXHAUSTO	Project: CX3050 & CX3060 - With AFC	Start date:	24-08-2022	Constructor:	DKTSA	Page:	27
		Revision date:	18-03-2026	Approved by:	DKLEG	Previous page:	26
Drawing number: 0400103	Page Title: 9: Preheater + CCW	Revision:	F	Scale:	1:1	Next page:	28
		Replaces revision:	E	Format:	A3	Pages in total:	48

Connections configuration 10: Electric Preheating Coil + Electric Postheating Coil

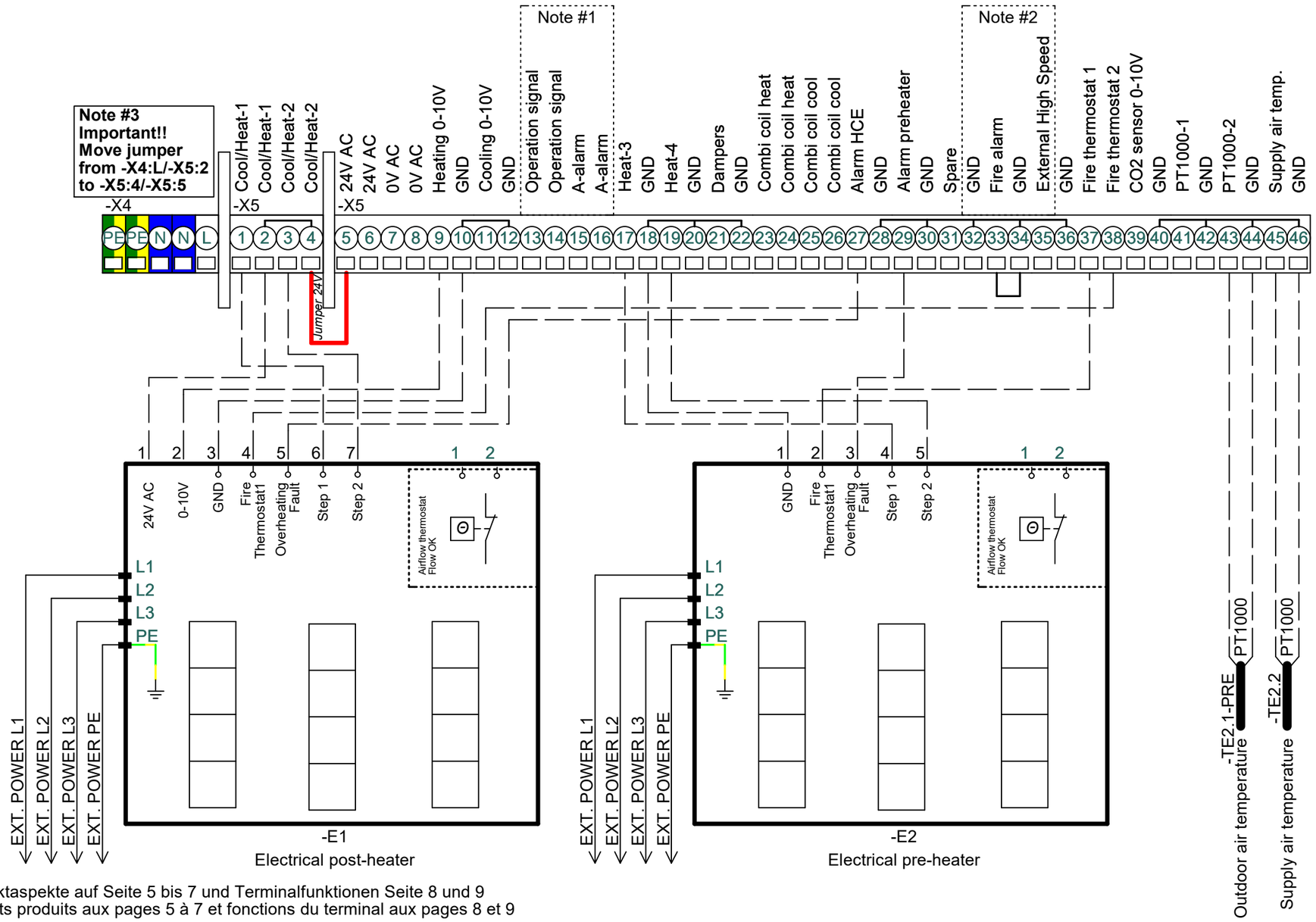

Note #1
Default configuration.
Can be changed to:
- B-alarm output
- Alarm reset
- Summer operation
- Summer night cooling

Note #2
Default configuration.
Can be changed to:
- AHU STOP
- Low speed
- Medium speed
- Frost alarm
- External start
- External reset alarms

If used remove jumper

** Heater Step 2 are only used in the high performance heaters*

** Outdoor air temperature sensor must be mounted in the outside air duct, before the preheating coil.*

** Supply air temperature sensor must be mounted in supply air duct after heating and cooling coils*

Produktaspekte auf Seite 5 bis 7 und Terminalfunktionen Seite 8 und 9
Aspects produits aux pages 5 à 7 et fonctions du terminal aux pages 8 et 9

Manufactured by: EXHAUSTO	Project: CX3050 & CX3060 - With AFC	Start date:	24-08-2022	Constructor:	DKTSA	Page:	28
		Revision date:	18-03-2026	Approved by:	DKLEG	Previous page:	27
Drawing number: 0400103	Page Title: 10: Preheater + HCE	Revision:	F	Scale:	1:1	Next page:	29
		Replaces revision:	E	Format:	A3	Pages in total:	48

Configuration 11: Preheater + Water Heating Coil + Water Cooling Coil

Continued on page 30

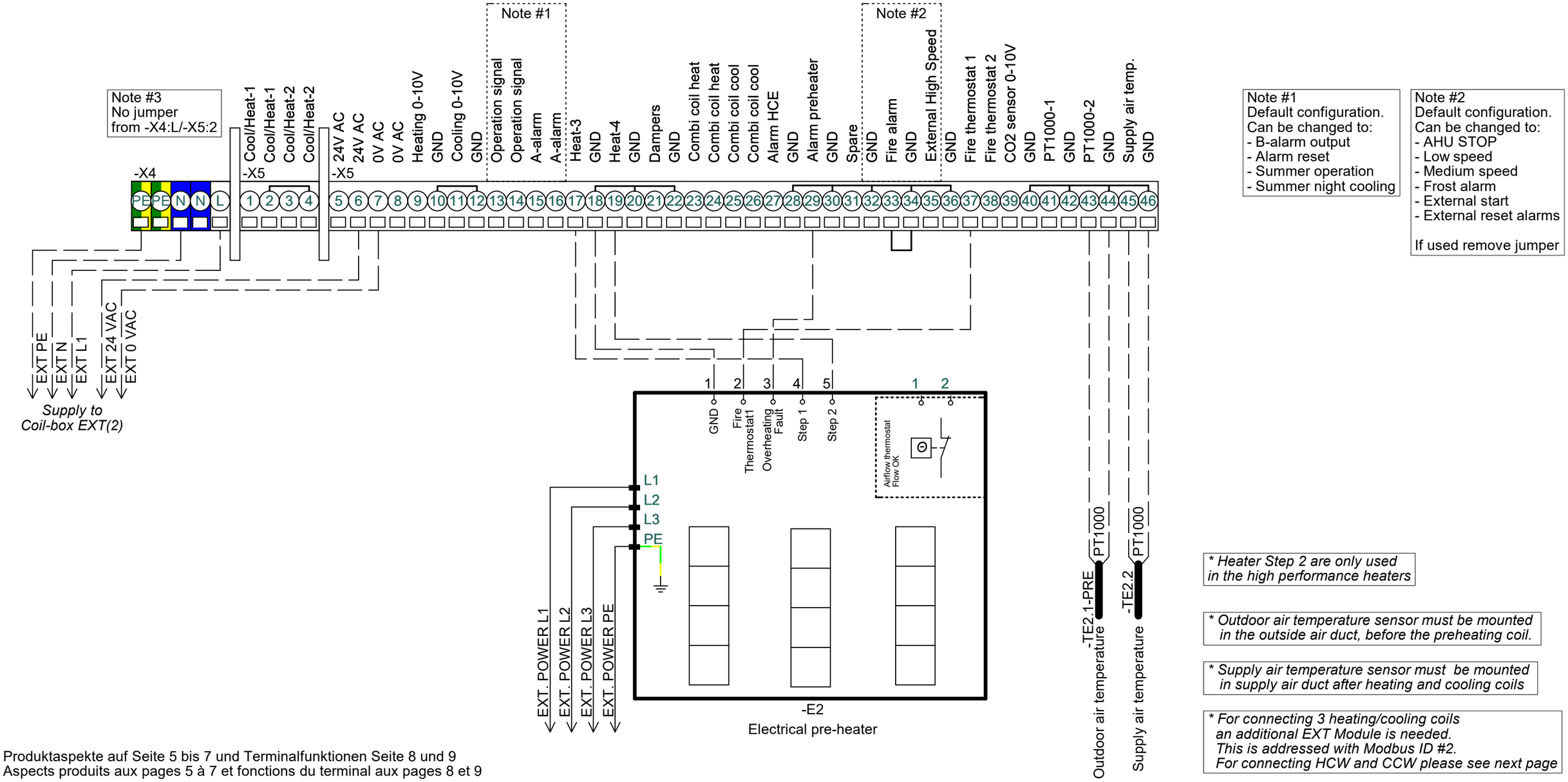

Note #1
Default configuration.
Can be changed to:
- B-alarm output
- Alarm reset
- Summer operation
- Summer night cooling

Note #2
Default configuration.
Can be changed to:
- AHU STOP
- Low speed
- Medium speed
- Frost alarm
- External start
- External reset alarms

If used remove jumper

** Heater Step 2 are only used in the high performance heaters*

** Outdoor air temperature sensor must be mounted in the outside air duct, before the preheating coil.*

** Supply air temperature sensor must be mounted in supply air duct after heating and cooling coils*

** For connecting 3 heating/cooling coils an additional EXT Module is needed. This is addressed with Modbus ID #2. For connecting HCW and CCW please see next page*

Produktaspekte auf Seite 5 bis 7 und Terminalfunktionen Seite 8 und 9
Aspects produits aux pages 5 à 7 et fonctions du terminal aux pages 8 et 9

Manufactured by: EXHAUSTO	Project: CX3050 & CX3060 - With AFC	Start date:	24-08-2022	Constructor:	DKTSA	Page:	29
		Revision date:	18-03-2026	Approved by:	DKLEG	Previous page:	28
Drawing number: 0400103	Page Title: 11: Preheater + HCW + CCW	Revision:	F	Scale:	1:1	Next page:	30
		Replaces revision:	E	Format:	A3	Pages in total:	48

Configuration 11: Preheater + Water Heating Coil + Water Cooling Coil

Continued from page 29

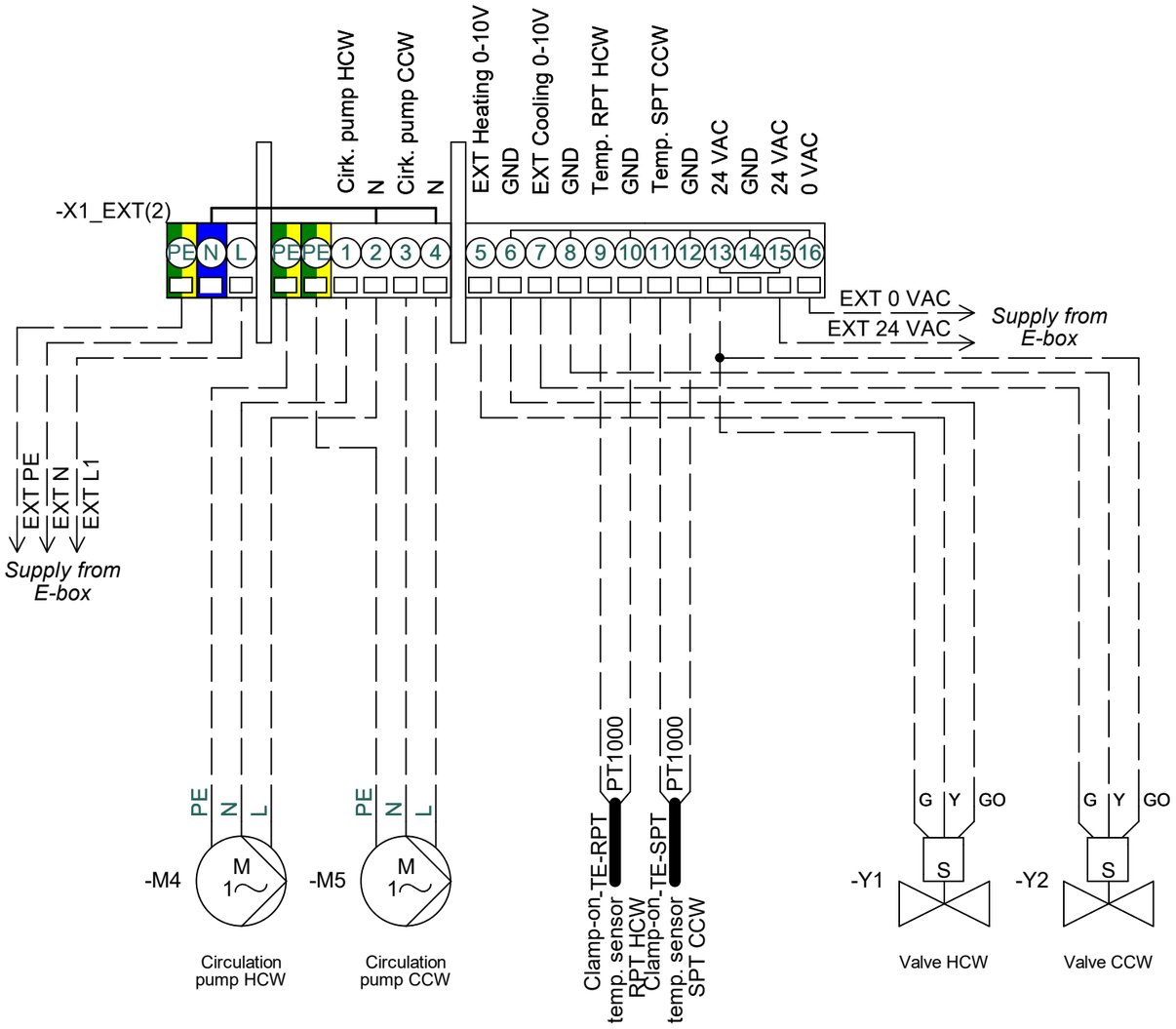

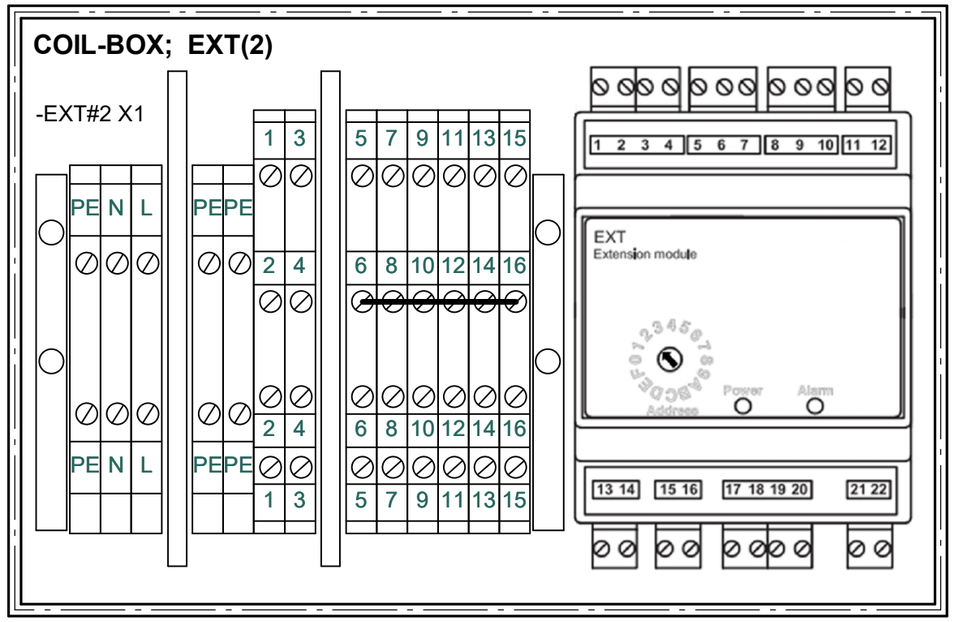

Note #1
Modbus connection to EXcon Master in E-box

Produktaspekte auf Seite 5 bis 7 und Terminalfunktionen Seite 8 und 9
Aspects produits aux pages 5 à 7 et fonctions du terminal aux pages 8 et 9

Manufactured by: EXHAUSTO	Project: CX3050 & CX3060 - With AFC	Start date:	24-08-2022	Constructor:	DKTSA	Page: 30
		Revision date:	18-03-2026	Approved by:	DKLEG	Previous page: 29
Drawing number: 0400103	Page Title: 11: Preheater + HCW + CCW	Revision:	F	Scale:	1:1	Next page: 31
		Replaces revision:	E	Format:	A3	Pages in total: 48

Connections configuration 12: Electric Preheating Coil + Electric Postheating Coil + Water Cooling Coil

Continued on page 32

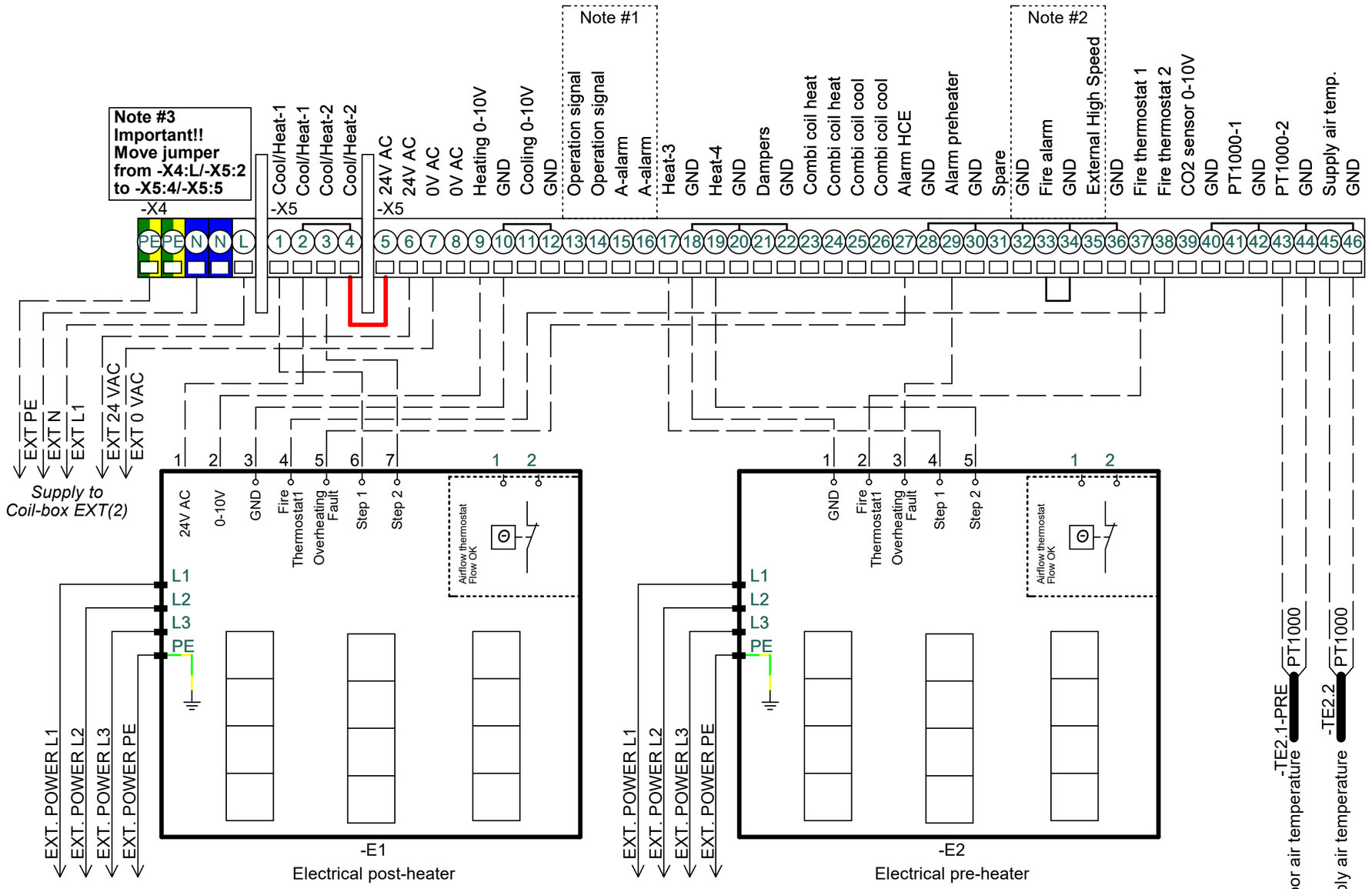

Note #1
Default configuration.
Can be changed to:
- B-alarm output
- Alarm reset
- Summer operation
- Summer night cooling

Note #2
Default configuration.
Can be changed to:
- AHU STOP
- Low speed
- Medium speed
- Frost alarm
- External start
- External reset alarms

If used remove jumper

** Heater Step 2 are only used in the high performance heaters*

** Outdoor air temperature sensor must be mounted in the outside air duct, before the preheating coil.*

** Supply air temperature sensor must be mounted in supply air duct after heating and cooling coils*

** For connecting 3 heating/cooling coils an additional EXT Module is needed. This is addressed with Modbus ID #2. For connecting HCW and CCW please see next page*

Produktaspekte auf Seite 5 bis 7 und Terminalfunktionen Seite 8 und 9
Aspects produits aux pages 5 à 7 et fonctions du terminal aux pages 8 et 9

Manufactured by: EXHAUSTO	Project: CX3050 & CX3060 - With AFC	Start date:	24-08-2022	Constructor:	DKTSA	Page:	31
		Revision date:	18-03-2026	Approved by:	DKLEG	Previous page:	30
Drawing number: 0400103	Page Title: 12: Preheater + HCE + CCW	Revision:	F	Scale:	1:1	Next page:	32
		Replaces revision:	E	Format:	A3	Pages in total:	48

Connections configuration 12: Electric Preheating Coil + Electric Heating Coil + Water Cooling Coil

Continued from page 31

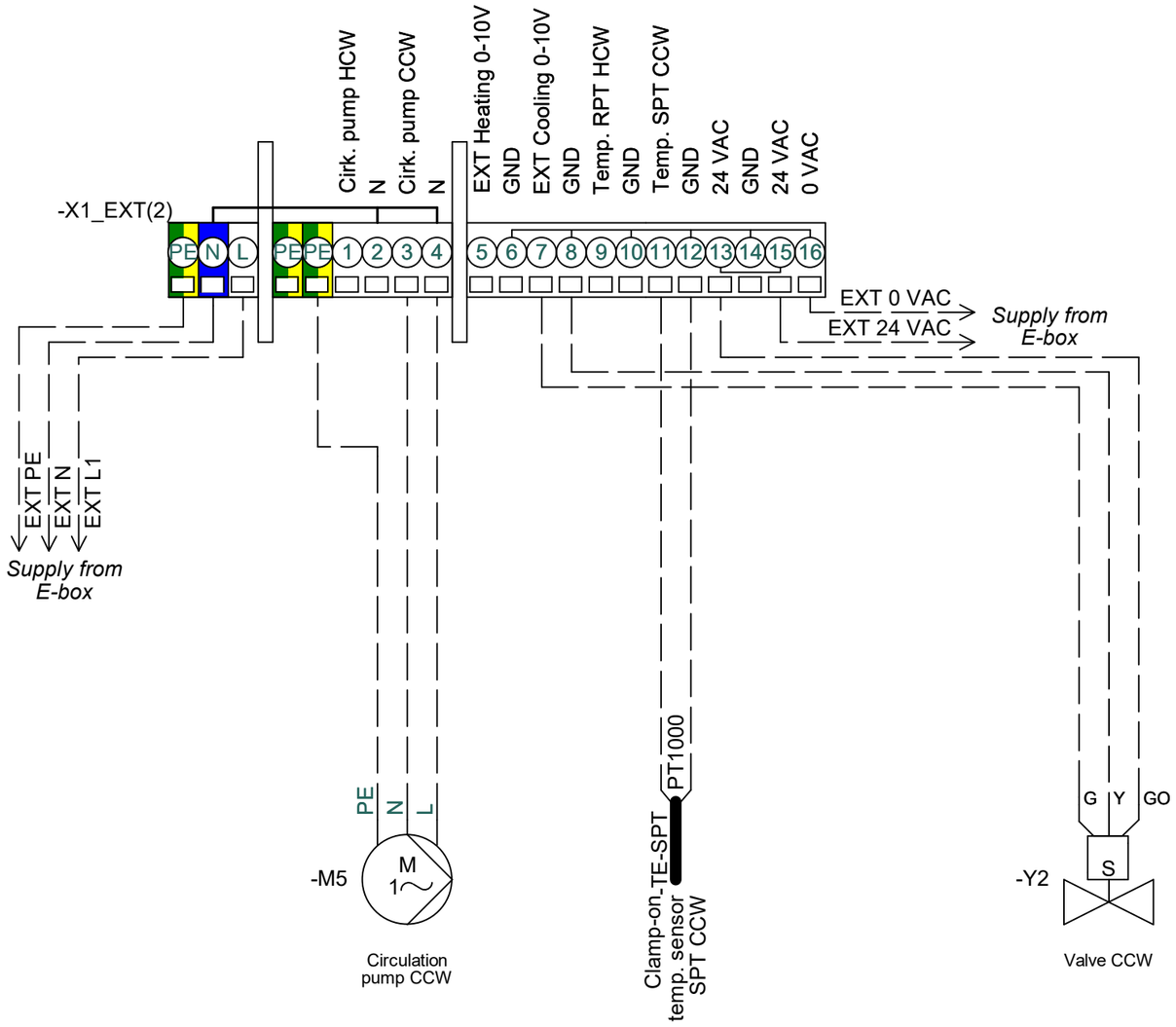

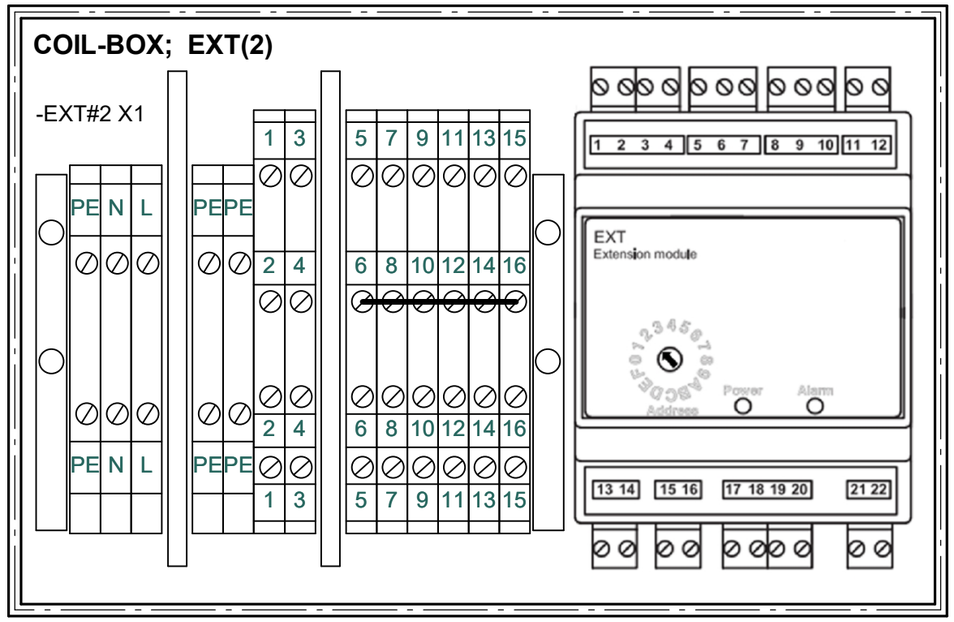

Note #1
Modbus connection to EXcon Master in E-box

Produktaspekte auf Seite 5 bis 7 und Terminalfunktionen Seite 8 und 9
Aspects produits aux pages 5 à 7 et fonctions du terminal aux pages 8 et 9

Manufactured by: EXHAUSTO	Project: CX3050 & CX3060 - With AFC	Start date:	24-08-2022	Constructor:	DKTSA	Page: 32
		Revision date:	18-03-2026	Approved by:	DKLEG	Previous page: 31
Drawing number: 0400103	Page Title: 12: Preheater + HCE + CCW	Revision:	F	Scale:	1:1	Next page: 33
		Replaces revision:	E	Format:	A3	Pages in total: 48

Configuration 13: Change-Over CW (Combi-Coil)

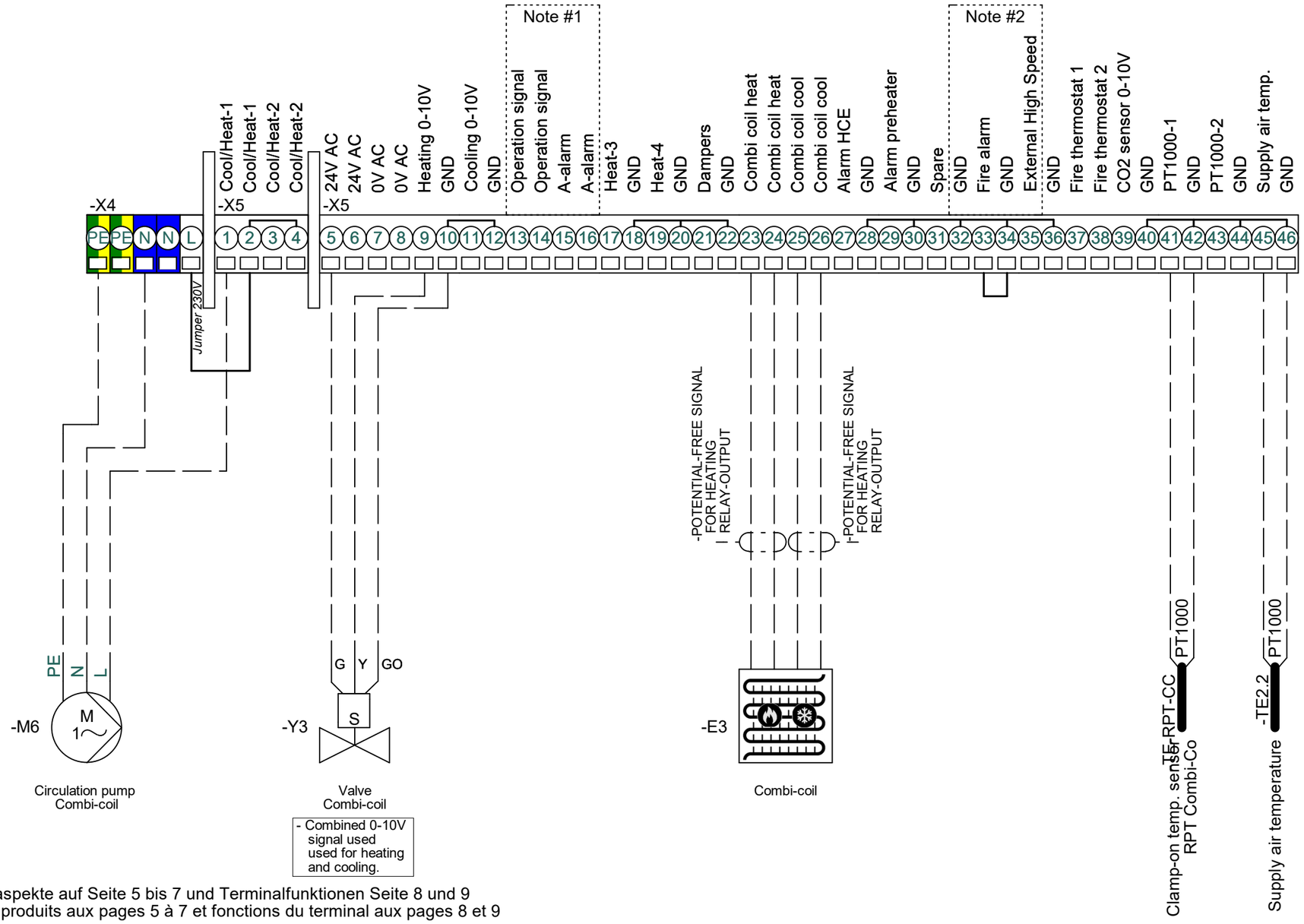

Note #1
Default configuration.
Can be changed to:
- B-alarm output
- Alarm reset
- Summer operation
- Summer night cooling

Note #2
Default configuration.
Can be changed to:
- AHU STOP
- Low speed
- Medium speed
- Frost alarm
- External start
- External reset alarms

If used remove jumper

** Supply air temperature sensor must be mounted in supply air duct after heating and cooling coils*

Produktaspekte auf Seite 5 bis 7 und Terminalfunktionen Seite 8 und 9
Aspects produits aux pages 5 à 7 et fonctions du terminal aux pages 8 et 9

Manufactured by: EXHAUSTO	Project: CX3050 & CX3060 - With AFC	Start date:	24-08-2022	Constructor:	DKTSA	Page:	33
		Revision date:	18-03-2026	Approved by:	DKLEG	Previous page:	32
Drawing number: 0400103	Page Title: 13: Change-Over CW (Combi-Coil)	Revision:	F	Scale:	1:1	Next page:	34
		Replaces revision:	E	Format:	A3	Pages in total:	48

Connections configuration 14: Preheater + C-O CW (Combi-Coil)

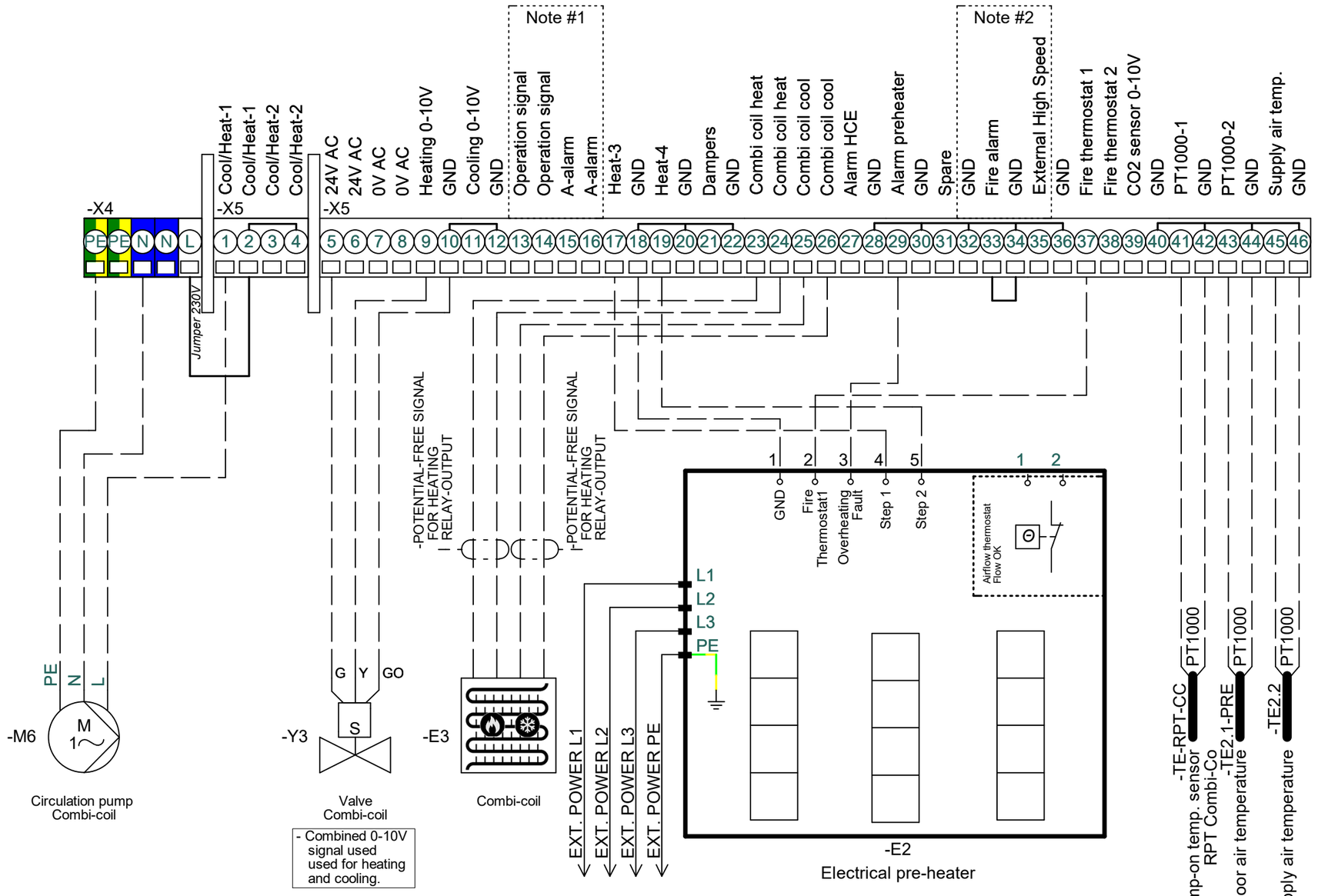

Note #1
Default configuration.
Can be changed to:
- B-alarm output
- Alarm reset
- Summer operation
- Summer night cooling

Note #2
Default configuration.
Can be changed to:
- AHU STOP
- Low speed
- Medium speed
- Frost alarm
- External start
- External reset alarms

If used remove jumper

** Heater Step 2 are only used in the high performance heaters*

** Outdoor air temperature sensor must be mounted in the outside air duct, before the preheating coil.*

** Supply air temperature sensor must be mounted in supply air duct after heating and cooling coils*

Produktaspekte auf Seite 5 bis 7 und Terminalfunktionen Seite 8 und 9
Aspects produits aux pages 5 à 7 et fonctions du terminal aux pages 8 et 9

Manufactured by: EXHAUSTO	Project: CX3050 & CX3060 - With AFC	Start date:	24-08-2022	Constructor:	DKTSA	Page:	34
		Revision date:	18-03-2026	Approved by:	DKLEG	Previous page:	33
Drawing number: 0400103	Page Title: 14: Preheater+Combi-Coil	Revision:	F	Scale:	1:1	Next page:	35
		Replaces revision:	E	Format:	A3	Pages in total:	48

Optional accessories

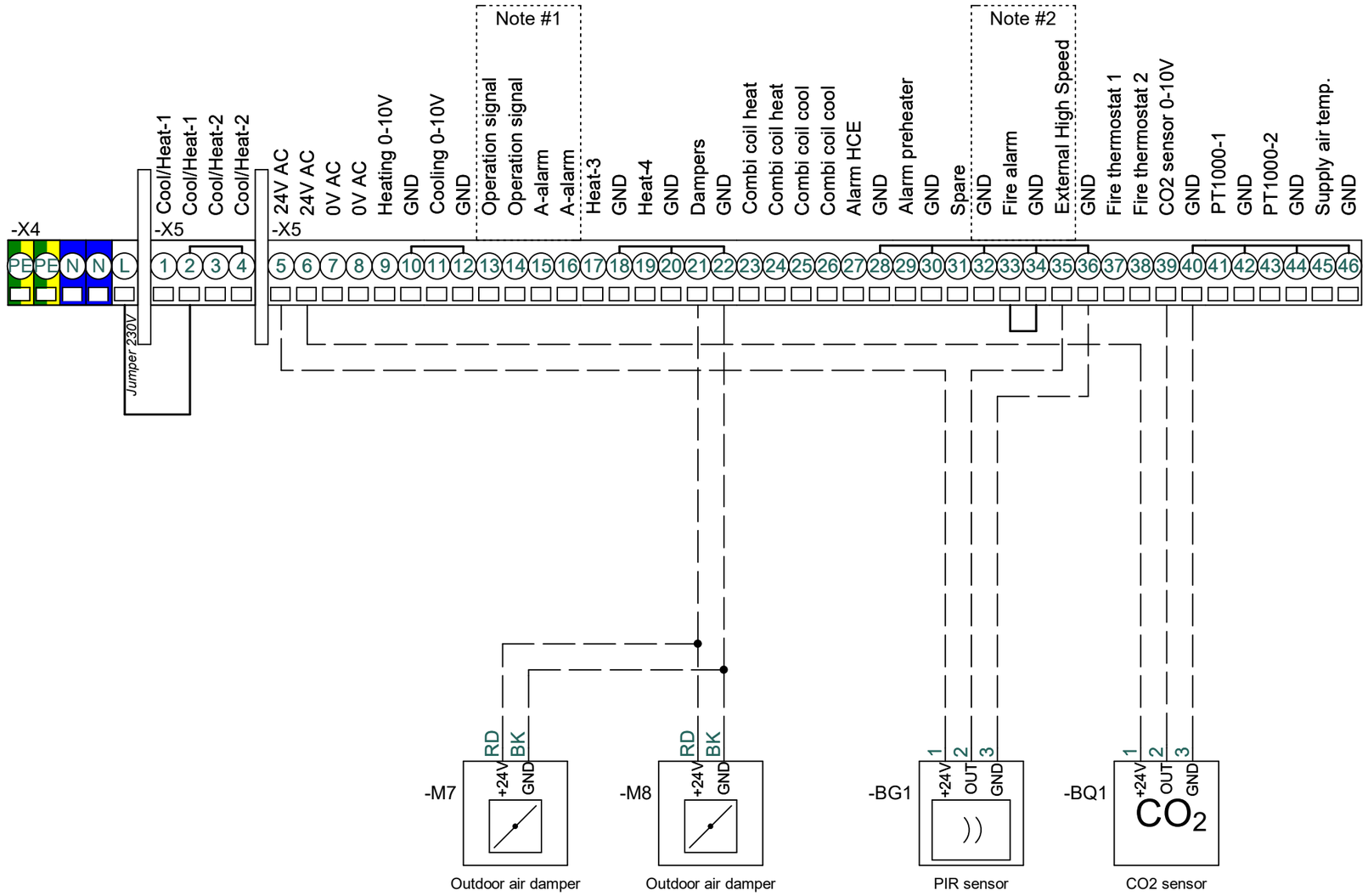

Note #1
Default configuration.
Can be changed to:
- B-alarm output
- Alarm reset
- Summer operation
- Summer night cooling

Note #2
Default configuration.
Can be changed to:
- AHU STOP
- Low speed
- Medium speed
- Frost alarm
- External start
- External reset alarms

If used remove jumper

Produktaspekte auf Seite 5 bis 7 und Terminalfunktionen Seite 8 und 9
Aspects produits aux pages 5 à 7 et fonctions du terminal aux pages 8 et 9

Manufactured by: EXHAUSTO	Project: CX3050 & CX3060 - With AFC	Start date:	24-08-2022	Constructor:	DKTSA	Page:	35
		Revision date:	18-03-2026	Approved by:	DKLEG	Previous page:	34
Drawing number: 0400103	Page Title: Optional accessories	Revision:	F	Scale:	1:1	Next page:	36
		Replaces revision:	E	Format:	A3	Pages in total:	48

Optional accessories MODBUS

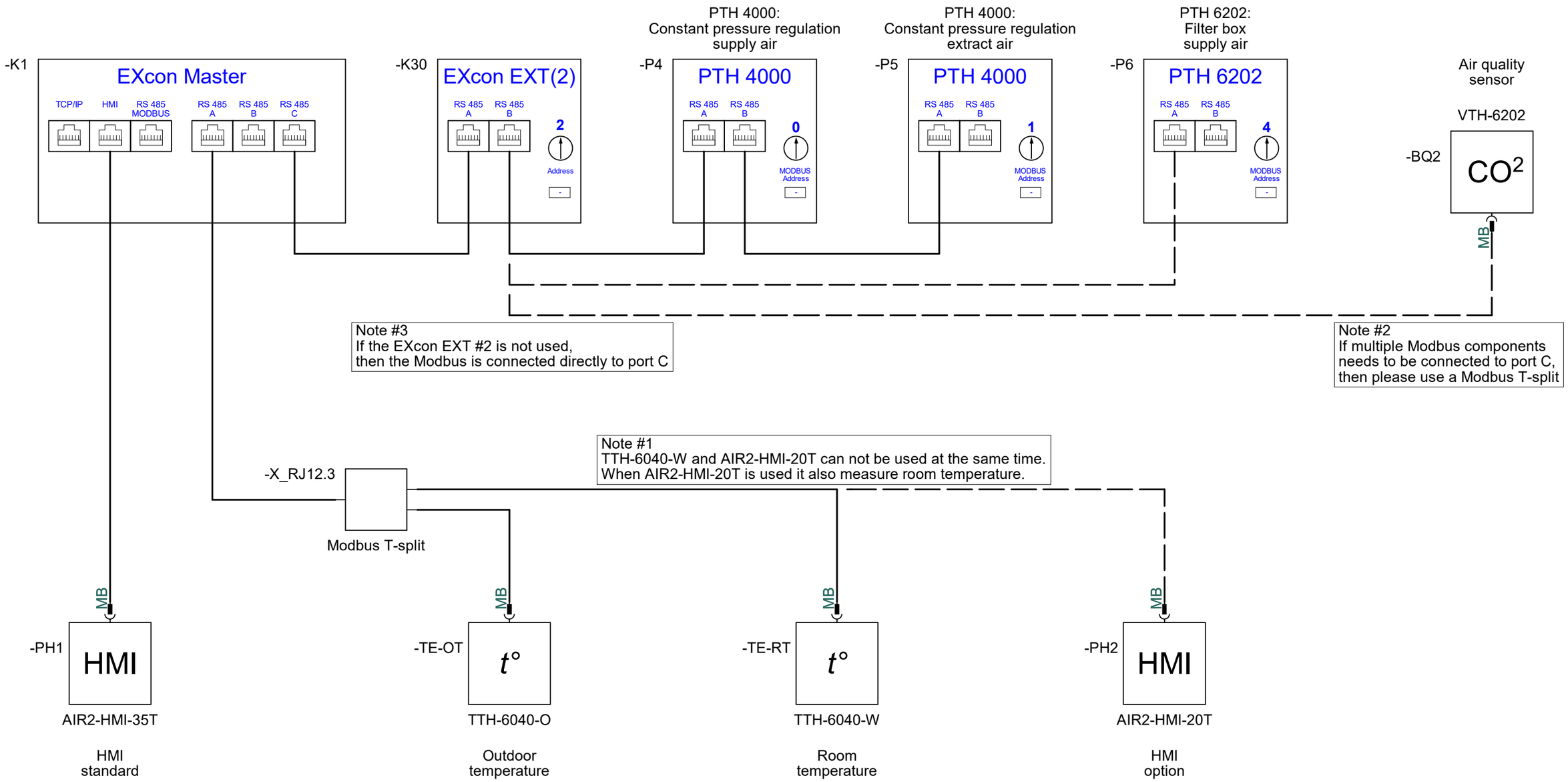

Manufactured by: EXHAUSTO	Project: CX3050 & CX3060 - With AFC	Start date:	24-08-2022	Constructor:	DKTSA	Page: 36
		Revision date:	18-03-2026	Approved by:	DKLEG	Previous page: 35
Drawing number: 0400103	Page Title: Optional accessories MODBUS	Revision:	F	Scale:	1:1	Next page: 40
		Replaces revision:	E	Format:	A3	Pages in total: 48

Electric heaters

Manufactured by: EXHAUSTO	Project: CX3050 & CX3060 - With AFC	Start date:	24-08-2022	Constructor:	DKTSA	Page:	40
		Revision date:	18-03-2026	Approved by:	DKLEG	Previous page:	36
Drawing number: 0400103	Page Title: Electric heaters	Revision:	F	Scale:	1:1	Next page:	41
		Replaces revision:	E	Format:	A3	Pages in total:	48

Component	Product aspects (GB)	Produktaspekte (DE)	Aspects du produit (FR)
+A4.1/-E1	Electric heater Step 1	Elektroheizregister Stufe 1	Batterie de chauffage électrique étape 1
+A4.1/-F1	Main fuse heater	Hauptsichrung Heizregister	Fusible pour le batterie de chauffage
+A4.1/-K1	Contactor HE 1	Schütz Heizregister Stufe 1	Contacteur batterie de chauffage étape 1
+A4.1/-S3	Main switch heater	Hauptschalter Heizregister	Interrupteur principal le batterie de chauffage
+A4.1/-T1	Fire thermostat 110°C	Brandthermostat 110°C	Thermostat incendie 110 °C
+A4.1/-T2	Overheating thermostat 70°C	Überhitzungsthermostat 70°C	Thermostat de surchauffe 70 °C
+A4.1/-T3	Air flow thermostat - Open at 60°C/Reset at 45°C	Luftmengenthermostat - Öffnen bei 60°C/Zurücksetzen bei 45°C	Thermostat de débit d'air - Ouvert à 60°C/Réinitialisé à 45°C
+A4.1/-W1	Main power supply cable heater	Kabel Spannungsversorgung Heizregister	Câble d'alimentation principale le batterie de chauffage
+A4.1/-X1	Main PE terminal	Anschlußklemme für Haupt-PE	Borne pour PE principal
+A4.1/-X3	Terminals for Control signals	Anschlußklemmen für Steuersignale	Bornier pour signal de commande
+A4.1/-X4	Terminals for Air flow OK	Anschlußklemmen für Luftmengen OK	Bornier pour flux d'air OK
+A4.2/-E1	Electric heater Step 1	Elektroheizregister Stufe 1	Batterie de chauffage électrique étape 1
+A4.2/-F1	Main fuse heater	Hauptsichrung Heizregister	Fusible pour le batterie de chauffage
+A4.2/-K1	Contactor HE 1	Schütz Heizregister Stufe 1	Contacteur batterie de chauffage étape 1
+A4.2/-S3	Main switch heater	Hauptschalter Heizregister	Interrupteur principal le batterie de chauffage
+A4.2/-T1	Fire thermostat 110°C	Brandthermostat 110°C	Thermostat incendie 110 °C
+A4.2/-T2	Overheating thermostat 70°C	Überhitzungsthermostat 70°C	Thermostat de surchauffe 70 °C
+A4.2/-T3	Air flow thermostat - Open at 60°C/Reset at 45°C	Luftmengenthermostat - Öffnen bei 60°C/Zurücksetzen bei 45°C	Thermostat de débit d'air - Ouvert à 60°C/Réinitialisé à 45°C
+A4.2/-TC1	Triac HE 1	Triac Heizregister 1	Commande par Triac de la batterie de chauffage 1
+A4.2/-W1	Main power supply cable heater	Kabel Spannungsversorgung Heizregister	Câble d'alimentation principale le batterie de chauffage
+A4.2/-X1	Main PE terminal	Anschlußklemme für Haupt-PE	Borne pour PE principal
+A4.2/-X3	Terminals for Control signals	Anschlußklemmen für Steuersignale	Bornier pour signal de commande
+A4.2/-X4	Terminals for Air flow OK	Anschlußklemmen für Luftmengen OK	Bornier pour flux d'air OK
+A4.3/-E1	Electric heater Step 1	Elektroheizregister Stufe 1	Batterie de chauffage électrique étape 1
+A4.3/-E2	Electric heater Step 2	Elektroheizregister Stufe 2	Batterie de chauffage électrique étape 2
+A4.3/-F1	Main fuse heater	Hauptsichrung Heizregister	Fusible pour le batterie de chauffage
+A4.3/-K1	Contactor HE 1	Schütz Heizregister Stufe 1	Contacteur batterie de chauffage étape 1
+A4.3/-K2	Contactor HE 2	Schütz Heizregister Stufe 2	Contacteur batterie de chauffage étape 2
+A4.3/-S3	Main switch heater	Hauptschalter Heizregister	Interrupteur principal le batterie de chauffage

Component	Product aspects (GB)	Produktaspekte (DE)	Aspects du produit (FR)
+A4.3/-T1	Fire thermostat 110°C	Brandthermostat 110°C	Thermostat incendie 110 °C
+A4.3/-T2	Overheating thermostat 70°C	Überhitzungsthermostat 70°C	Thermostat de surchauffe 70 °C
+A4.3/-T3	Air flow thermostat - Open at 60°C/Reset at 45°C	Luftmengenthermostat - Öffnen bei 60°C/Zurücksetzen bei 45°C	Thermostat de débit d'air - Ouvert à 60°C/Réinitialisé à 45°C
+A4.3/-W1	Main power supply cable heater	Kabel Spannungsversorgung Heizregister	Câble d'alimentation principale le batterie de chauffage
+A4.3/-X1	Main PE terminal	Anschlußklemme für Haupt-PE	Borne pour PE principal
+A4.3/-X3	Terminals for Control signals	Anschlußklemmen für Steuersignale	Bornier pour signal de commande
+A4.3/-X4	Terminals for Air flow OK	Anschlußklemmen für Luftmengen OK	Bornier pour flux d'air OK
+A4.4/-E1	Electric heater Step 1	Elektroheizregister Stufe 1	Batterie de chauffage électrique étape 1
+A4.4/-E2	Electric heater Step 2	Elektroheizregister Stufe 2	Batterie de chauffage électrique étape 2
+A4.4/-F1	Main fuse heater	Hauptsichrung Heizregister	Fusible pour le batterie de chauffage
+A4.4/-K1	Contactor HE 1	Schütz Heizregister Stufe 1	Contacteur batterie de chauffage étape 1
+A4.4/-K2	Contactor HE 2	Schütz Heizregister Stufe 2	Contacteur batterie de chauffage étape 2
+A4.4/-S3	Main switch heater	Hauptschalter Heizregister	Interrupteur principal le batterie de chauffage
+A4.4/-T1	Fire thermostat 110°C	Brandthermostat 110°C	Thermostat incendie 110 °C
+A4.4/-T2	Overheating thermostat 70°C	Überhitzungsthermostat 70°C	Thermostat de surchauffe 70 °C
+A4.4/-T3	Air flow thermostat - Open at 60°C/Reset at 45°C	Luftmengenthermostat - Öffnen bei 60°C/Zurücksetzen bei 45°C	Thermostat de débit d'air - Ouvert à 60°C/Réinitialisé à 45°C
+A4.4/-TC1	Triac HE 1	Triac Heizregister 1	Commande par Triac de la batterie de chauffage 1
+A4.4/-W1	Main power supply cable heater	Kabel Spannungsversorgung Heizregister	Câble d'alimentation principale le batterie de chauffage
+A4.4/-X1	Main PE terminal	Anschlußklemme für Haupt-PE	Borne pour PE principal
+A4.4/-X3	Terminals for Control signals	Anschlußklemmen für Steuersignale	Bornier pour signal de commande
+A4.4/-X4	Terminals for Air flow OK	Anschlußklemmen für Luftmengen OK	Bornier pour flux d'air OK

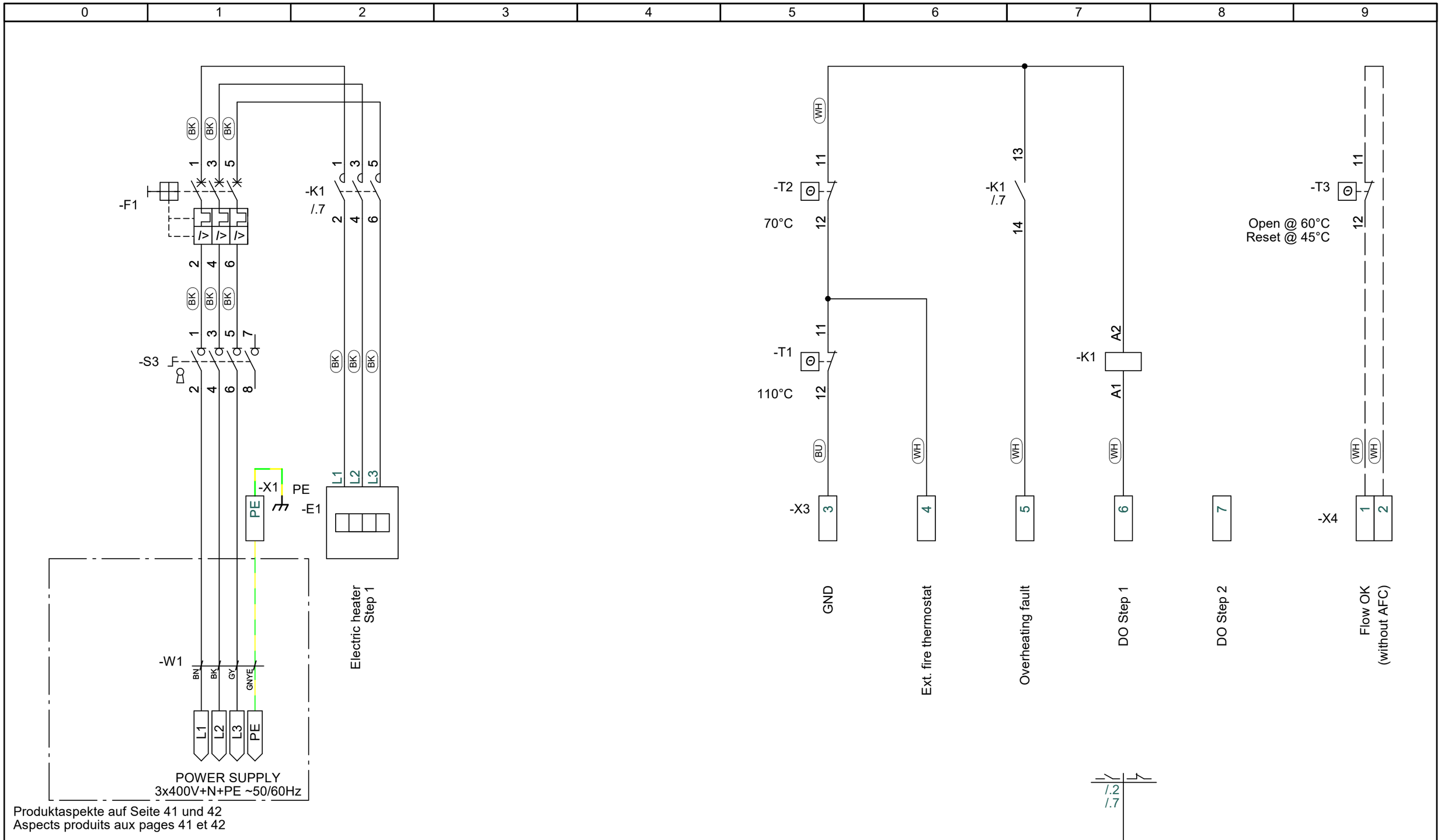

Produktaspekte auf Seite 41 und 42
Aspects produits aux pages 41 et 42

Manufactured by: EXHAUSTO	Project: CX3050 & CX3060 - With AFC	Start date:	24-08-2022	Constructor: DKTSA	Page: 43
		Revision date:	18-03-2026	Approved by: DKLEG	Previous page: 42
Drawing number: 0400103	Page Title: Electric pre-heater Step 1	Revision:	F	Scale: 1:1	Next page: 44
		Replaces revision:	E	Format: A3	Pages in total: 48

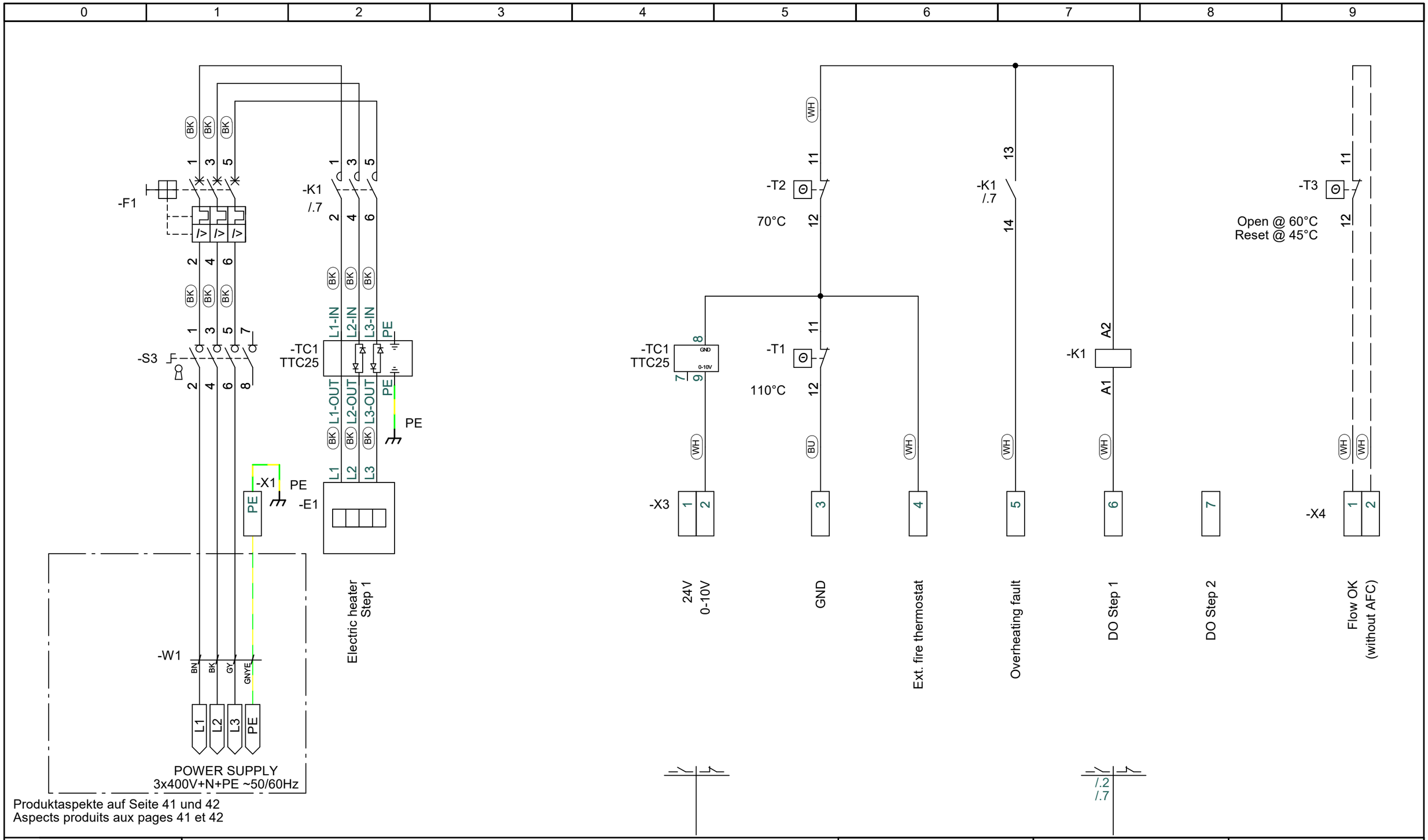

Produktaspekte auf Seite 41 und 42
Aspects produits aux pages 41 et 42

Manufactured by: EXHAUSTO	Project: CX3050 & CX3060 - With AFC	Start date: 24-08-2022	Constructor: DKTSA	Page: 44	
		Revision date: 18-03-2026	Approved by: DKLEG	Previous page: 43	
Drawing number: 0400103	Page Title: Electric heater Step 1	Revision: F	Scale: 1:1	Next page: 45	
		Replaces revision: E	Format: A3	Pages in total: 48	

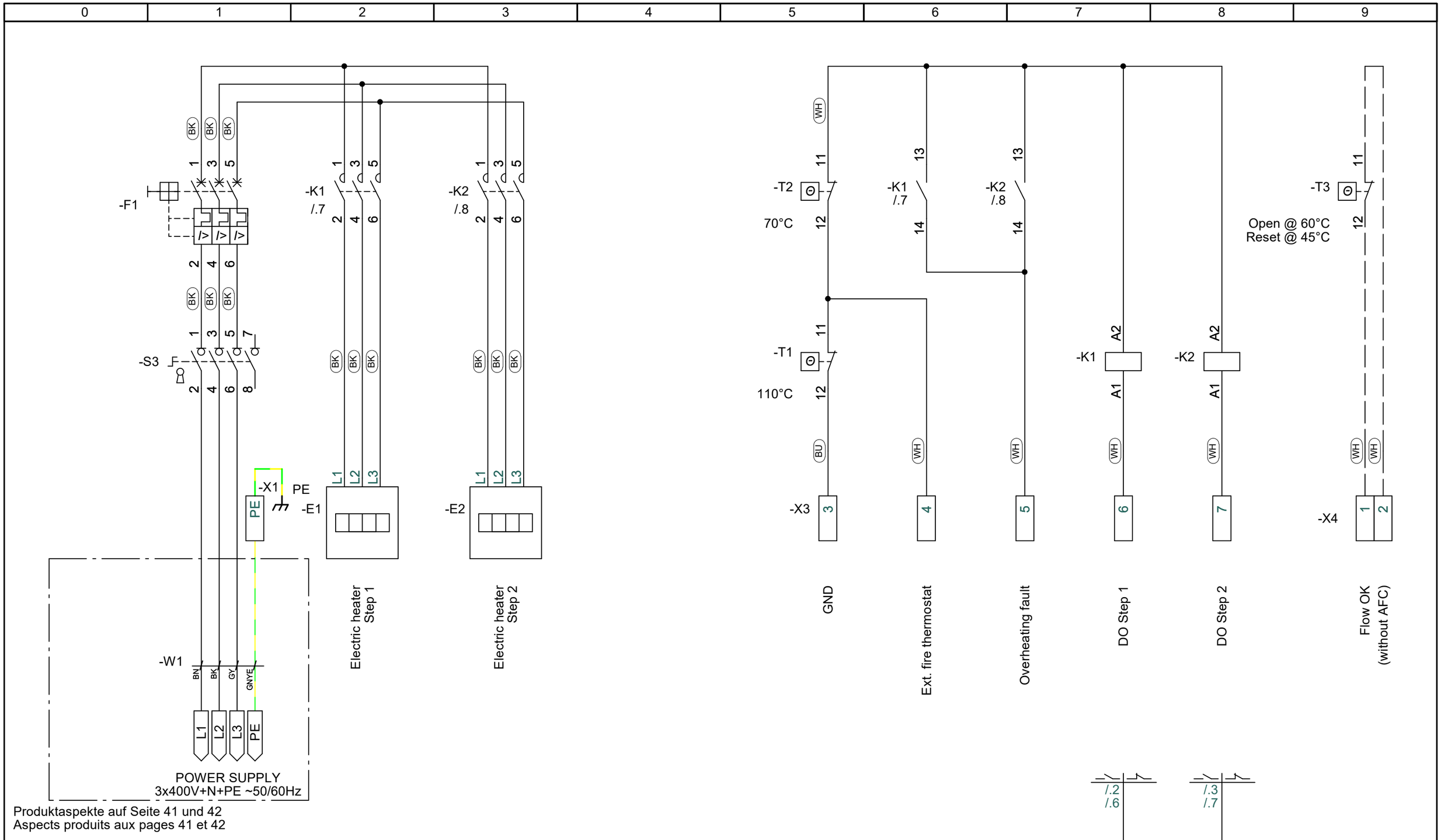

Produktaspekte auf Seite 41 und 42
Aspects produits aux pages 41 et 42

Manufactured by: EXHAUSTO	Project: CX3050 & CX3060 - With AFC	Start date:	24-08-2022	Constructor: DKTSA	Page: 45
		Revision date:	18-03-2026	Approved by: DKLEG	Previous page: 44
Drawing number: 0400103	Page Title: Electric pre-heater Step 1 & 2	Revision:	F	Scale: 1:1	Next page: 46
		Replaces revision:	E	Format: A3	Pages in total: 48

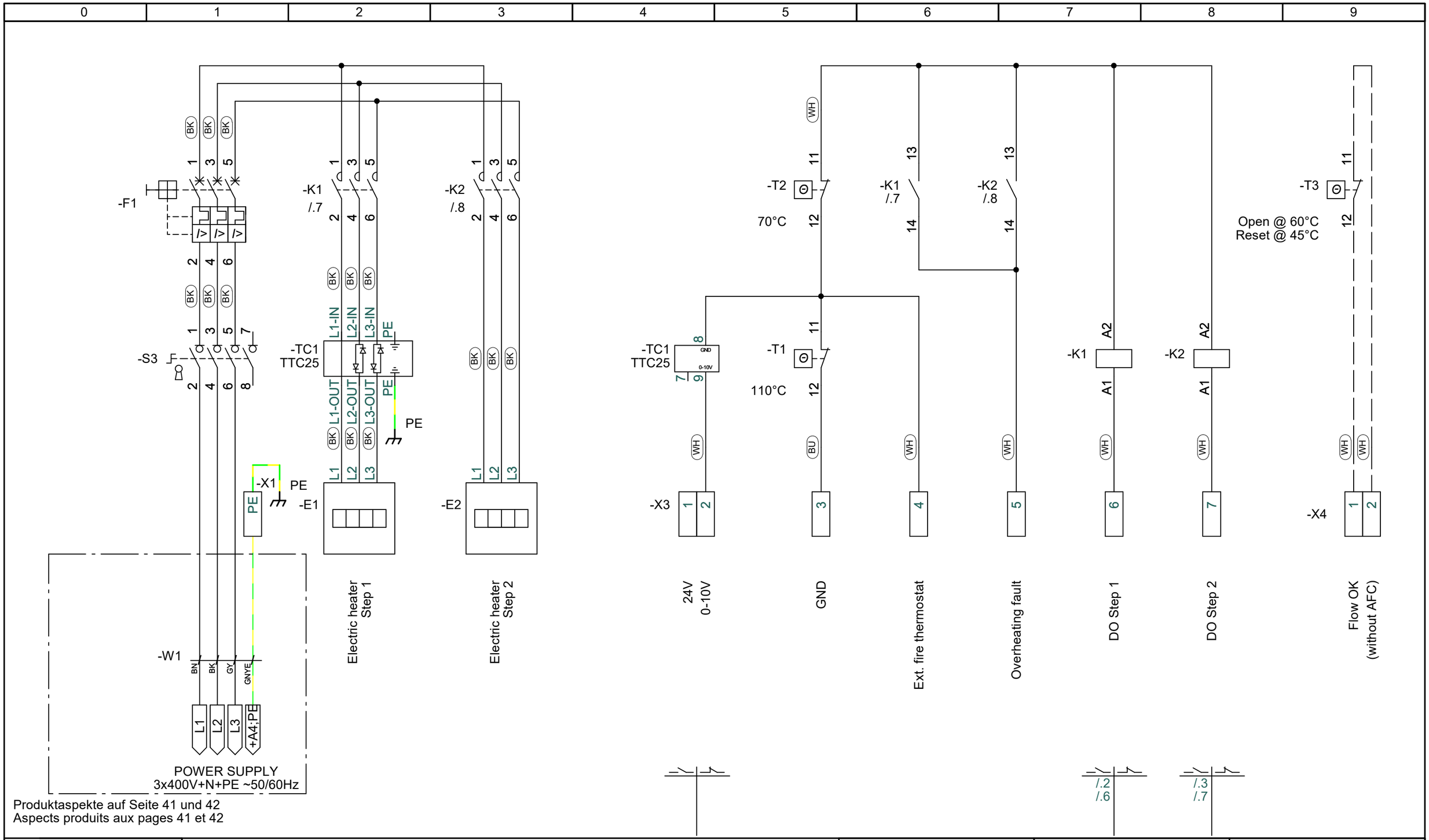

Produktaspekte auf Seite 41 und 42
Aspects produits aux pages 41 et 42

Manufactured by: EXHAUSTO	Project: CX3050 & CX3060 - With AFC	Start date:	24-08-2022	Constructor:	DKTSA
		Revision date:	18-03-2026	Approved by:	DKLEG
Drawing number: 0400103	Page Title: Electric heater Step 1 & 2	Revision:	F	Scale:	1:1
		Replaces revision:	E	Format:	A3

Page:	46
Previous page:	45
Next page:	47
Pages in total:	48

Carlo Gavazzi RG controller

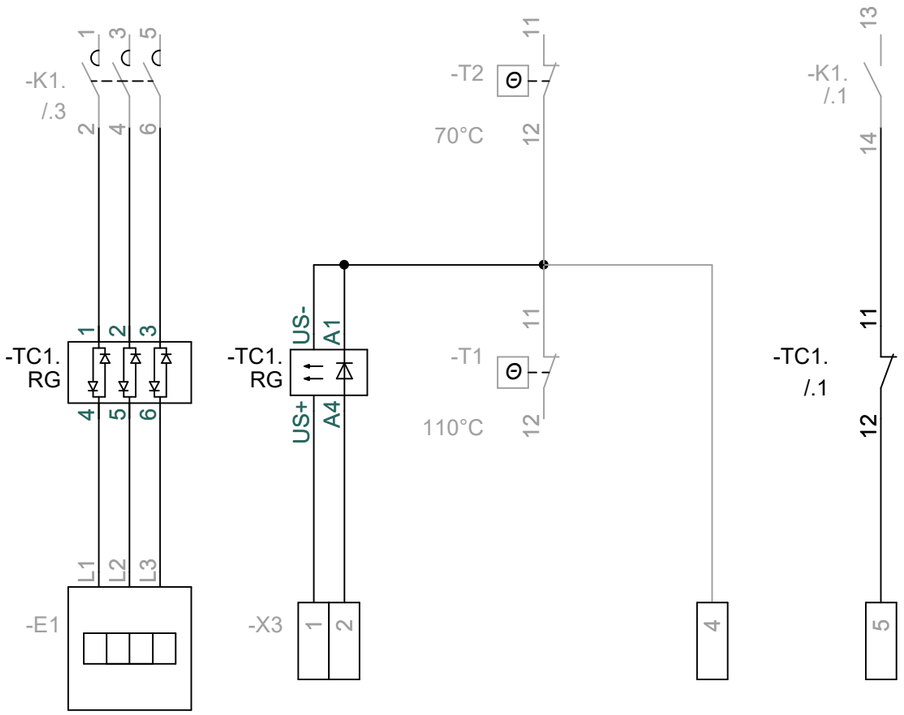

Produktaspekte auf Seite 41 und 42
Aspects produits aux pages 41 et 42

Regin TTC25 controller

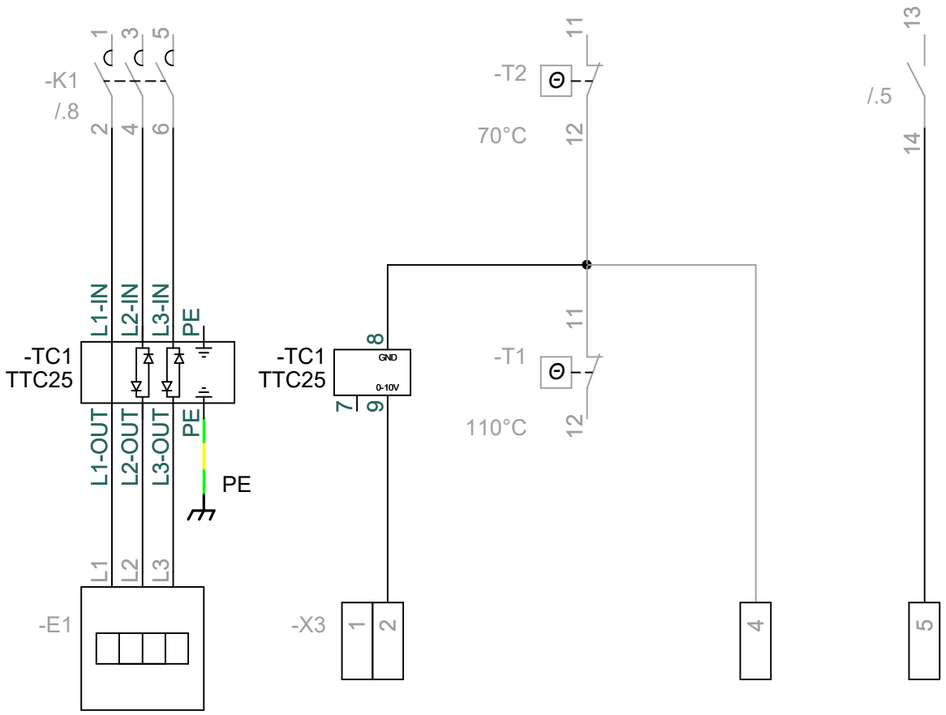

Manufactured by: EXHAUSTO	Project: CX3050 & CX3060 - With AFC	Start date:	24-08-2022	Constructor:	DKTSA	Page:	47
		Revision date:	18-03-2026	Approved by:	DKLEG	Previous page:	46
Drawing number: 0400103	Page Title: Carlo Gavazzi RG/Regin TTC25 conversion	Revision:	F	Scale:	1:1	Next page:	.
		Replaces revision:	E	Format:	A3	Pages in total:	48

Scan code and go to addresses at
www.exhausto.dk

EXHAUSTO