GB

# TIMERBUTTON3

## For EXcon and EXcon+ control system

Original instructions

**EXHAUSTO A/S**
Odensevej 76 · DK-5550 Langeskov
Tel.: +45 65661234 · exhausto@exhausto.dk
www.exhausto.dk

a member of Soler&Palau Ventilation Group

EXHAUSTO

1. Product information

1.1. How TIMERBUTTON3 works....3

1.1.1. Unpacking....3

1.1.2. Function....3

1.1.3. Web server....3

2. Installation

2.1. Layout and settings....4

2.1.1. Connection....4

2.1.2. Activation of External High Speed....4

3. Electrical installation

4. Configuration of web server

5. Dimensions

5.1. Drawings....9

5.1.1. TIMERBUTTON3....9

5.1.2. TIMERBUTTON3 (EU)....9

6. Technical data

# 1. Product information

## 1.1 How TIMERBUTTON3 works

### 1.1.1 Unpacking

These items are included with delivery of TIMERBUTTON3:

- LK Fuga low voltage push switch - 2 contacts w. 1 red LED
- FUGA Baseline 50 mounting frame
- FUGA Baseline back box
- FUGA back box screw insert
- FUGA-CE60 frame 1 module
- FUGA-CE60 adapter frame 1 module
- Surface mounted housing 1M

### 1.1.2 Function

TIMERBUTTON3 can be used in combination with EXcon or EXcon+ to override the ventilation level to “High Speed”.

Using the EXcon/EXcon+ web server, it is possible to define how long this override must be maintained before returning to the previous level.

The LED on TIMERBUTTON3 can be used to indicate that the currently selected level is set to “High Speed”.

### 1.1.3 Web server

Pressing TIMERBUTTON3 to set a "High Speed" run-on time can be configured in the web server for EXcon or EXcon+.

# 2. Installation

## 2.1 Layout and settings

TIMERBUTTON3 is used to activate the digital input “External High Speed” on EXcon or EXcon+ respectively.

The LED is connected to the “B-alarm” output, where the B-alarm is configured to track the “High Speed” level in EXcon or EXcon+.

As such, it is necessary for both the "External High Speed" input and the "B-Alarm" output to be configured.

### 2.1.1 Connection

The push button is connected with the following 3 lead wires:

1. Base frame (GND)
2. LED (Ø)
3. Press (OH+ØV)

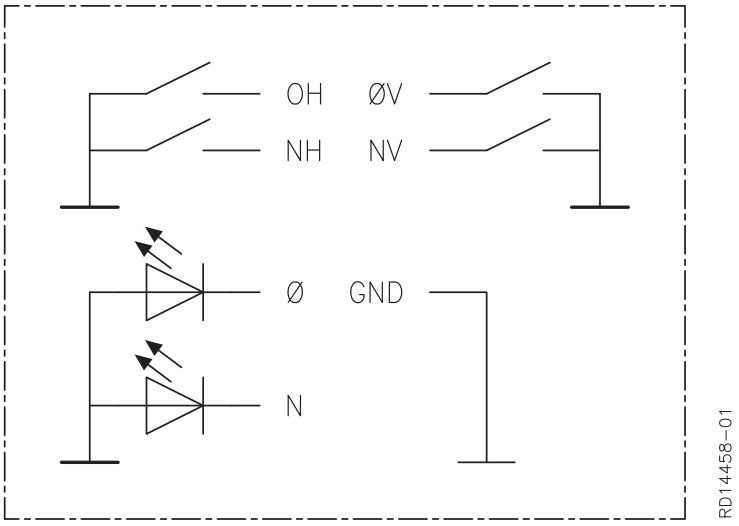


### 2.1.2 Activation of External High Speed

Override to "High Speed" is activated by pressing either the left or right button on the low voltage push switch. If the LED should indicate a "High Speed" level, hold down the button until the LED turns red. If the LED is already red, it means that the current level is already set to "High Speed".

When the unit has been forced to "High Speed" by pressing TIMERBUTTON3, this level will continue until the set run-on time as configured in EXcon or EXcon+ has expired, after which it will return to the previous level.

NB: If the unit is already set to "High Speed," e.g. via the calendar setting, pressing TIMERBUTTON3 will not have any function.

As such, it is recommended to use the "Low" or "Medium" speeds when using the calendar, so that "High Speed" is reserved for pressing TIMERBUTTON3.

# 3. Electrical installation

## Connection to EXcon unit

*The wiring diagrams for connecting to a VEX4000 unit are shown here.*

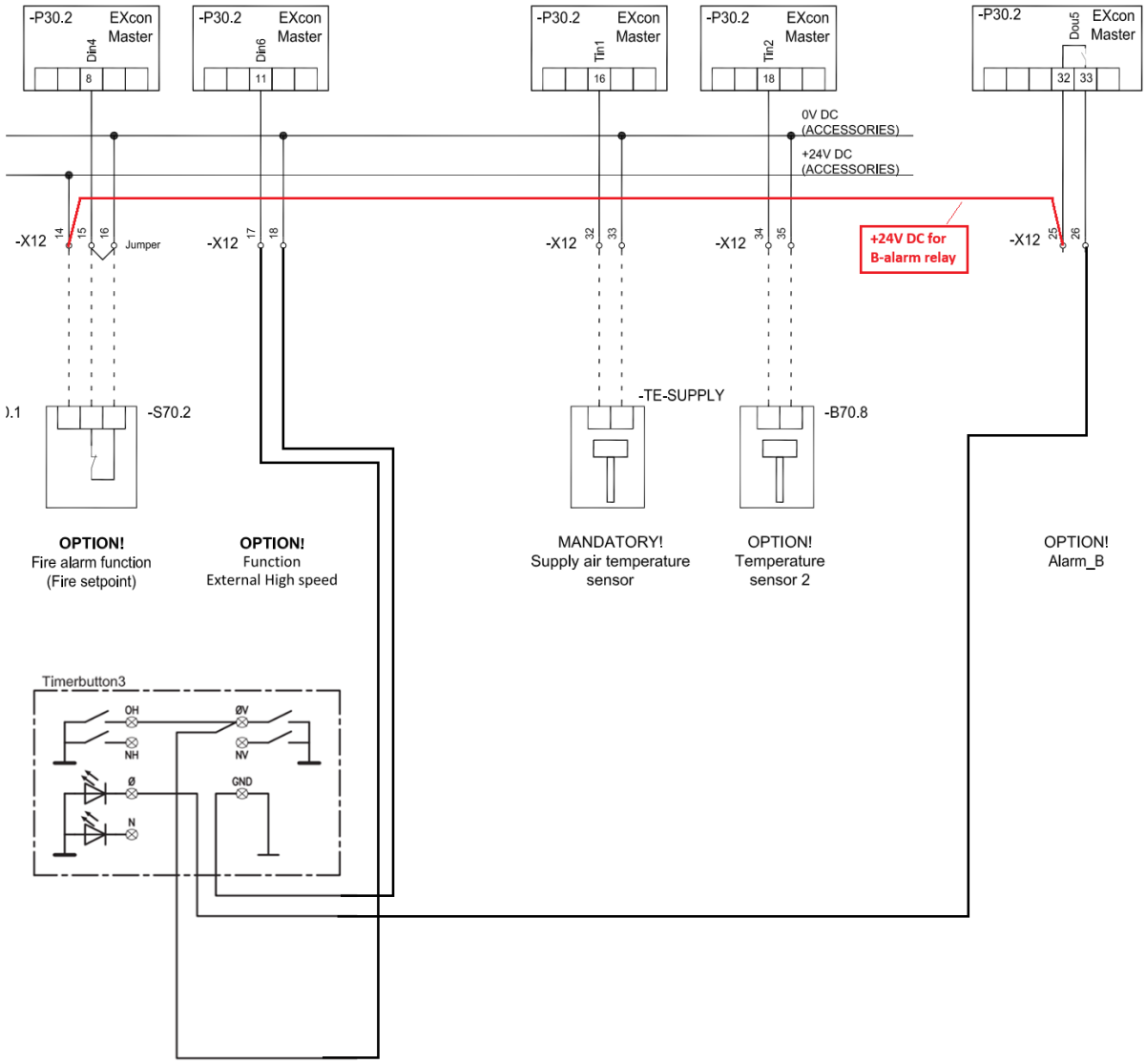




EXHAUSTO

## Connection to EXcon+ unit

*The wiring diagrams for connecting to a VEX1000 unit are shown here.*

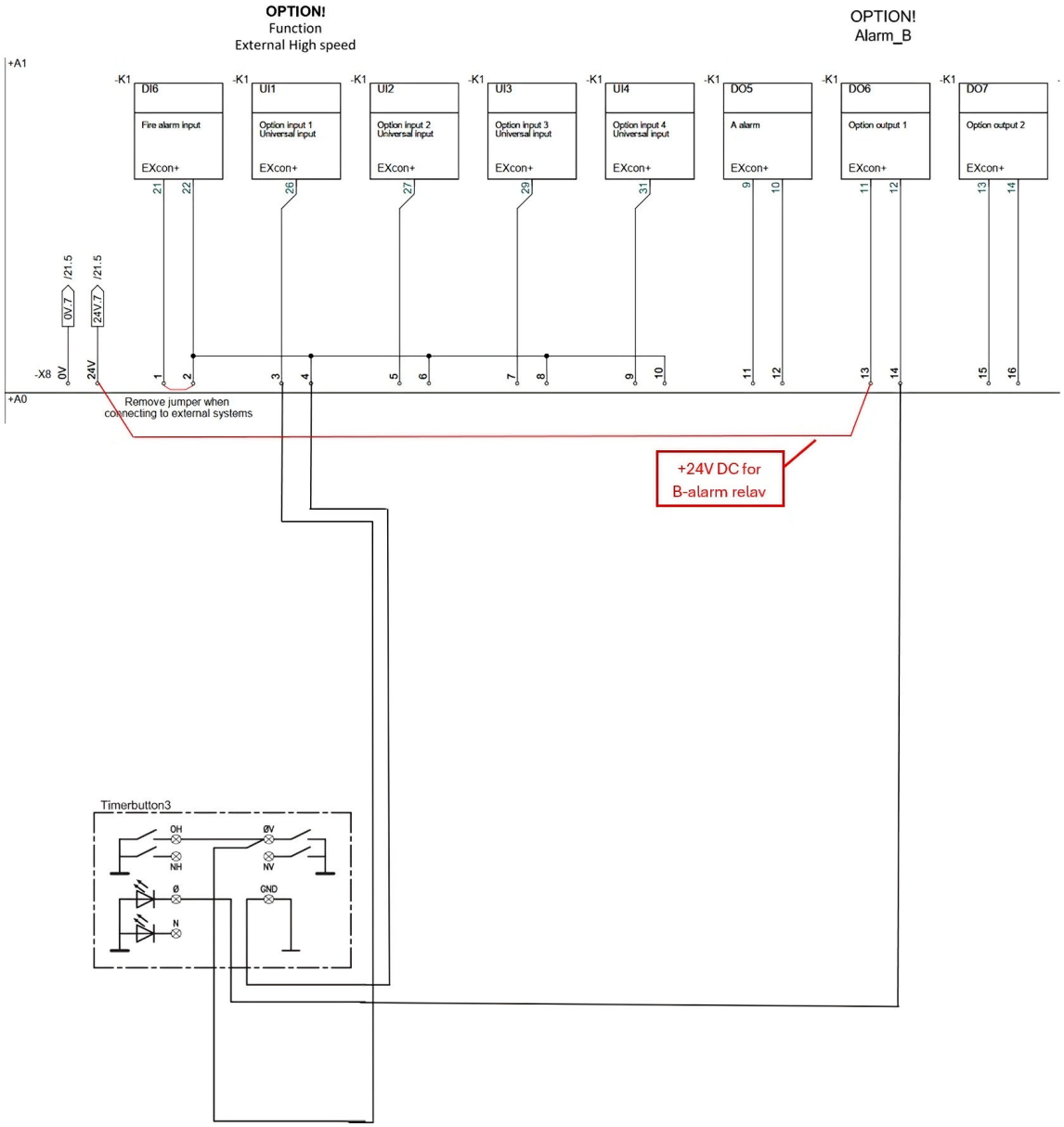




EXHAUSTO

# 4. Configuration of web server

## Setup in EXcon web server

If you want to use the LED on TIMERBUTTON3 to indicate that "High Speed" is activated, open the web server and navigate to Installer -> Operation -> Alarm relay

Select “Follow high speed”.

Finish by pressing “Save”.

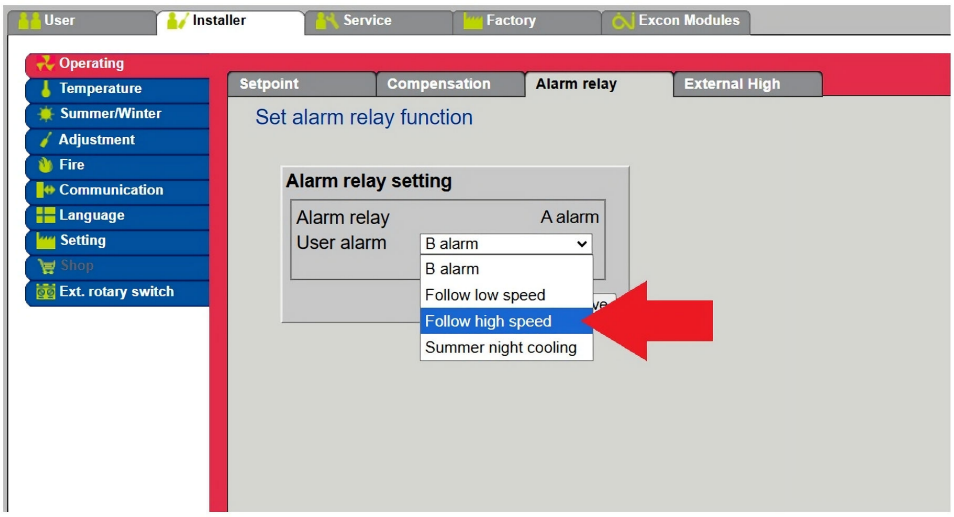


The run-on time, i.e. how long "High Speed" is set to run by pressing TIMER BUTTON3, is configured under Installer -> Operation -> External High

Set the desired run-on time.

Finish by pressing "Save".

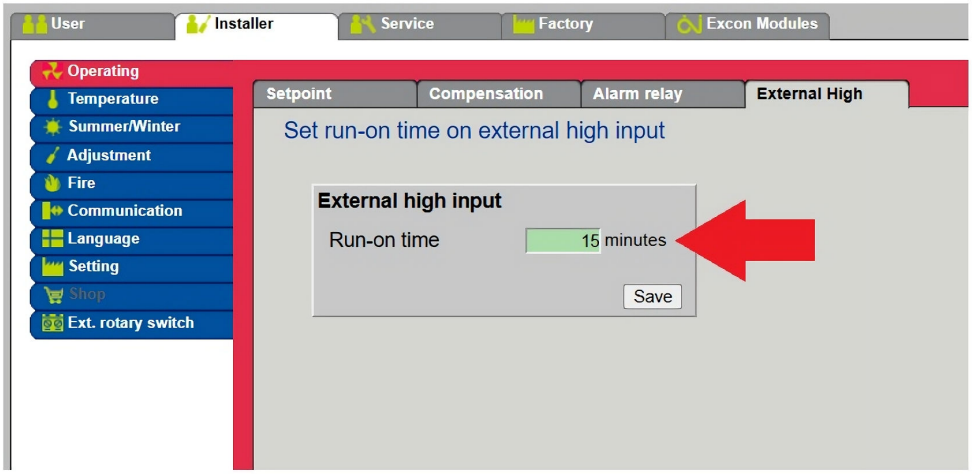


## Setup in EXcon+ web server

If you want to use the LED on TIMERBUTTON3 to indicate that "High Speed" is activated, open the web server and navigate to Installer -> Operation -> Alarm relay

Select “Follow high speed” under user settings.

Finish by pressing “Save”.



EXHAUSTO

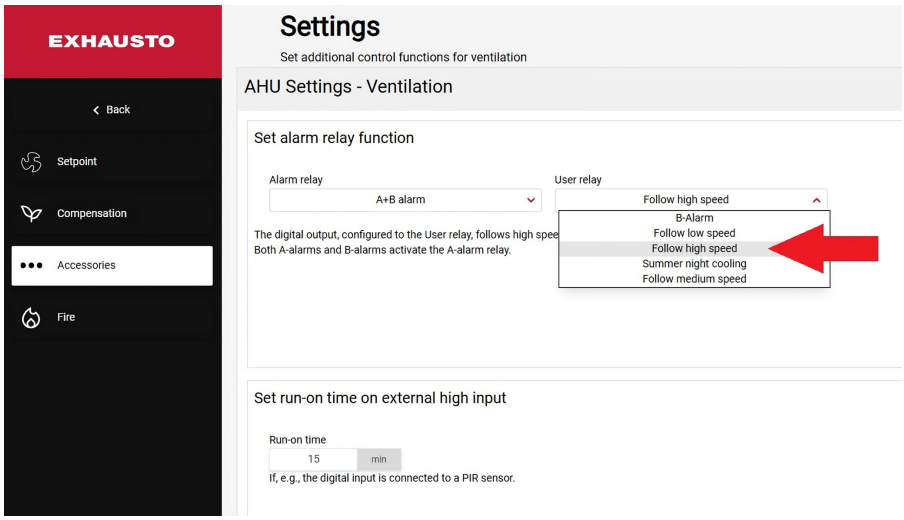


The run-on time, i.e. how long "High Speed" is set to run by pressing TIMER BUTTON3, is configured under Settings -> Ventilation -> Accessories

Set the desired run-on time.

Finish by pressing "Save".

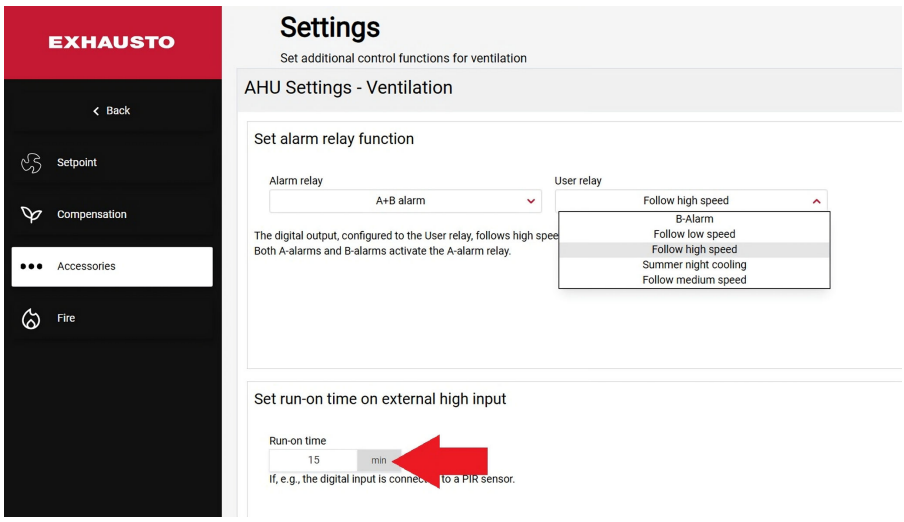

# 5. Dimensions

## 5.1 Drawings

### 5.1.1 TIMERBUTTON3

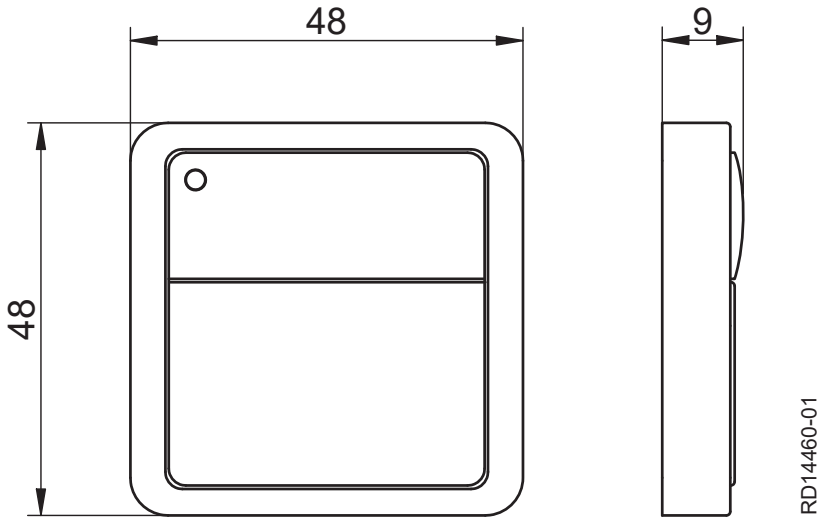


### 5.1.2 TIMERBUTTON3 (EU)

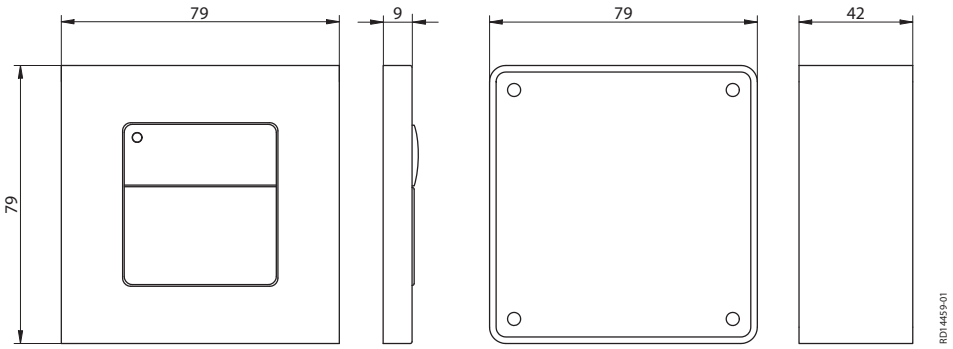




EXHAUSTO

# 6. Technical data

| | |
|---|---|
| Enclosure class | IP20 |
| Switch voltage | 5-24V |
| Switch current | 1-5mA ohmic load |
| Switch resistance | Max. 100 mOhm |
| Switch longevity | 300.000 connections at maximum load |
| LED: | 1 mA at 24V DC<br>Operating voltage range: 20-28V DC |

Scan code and go to addresses at
www.exhausto.com

**EXHAUSTO A/S**
Odensevej 76 · DK-5550 Langeskov
Tel.: +45 65661234 · exhausto@exhausto.dk
www.exhausto.dk

a member of
Soler&Palau Ventilation Group

EXHAUSTO