VEX1000

New standard for compact ventilation solutions



EXHAUSTO

VEX1000

Perfect airflow fit for any project

VEX1000 is an advanced platform of ultra-compact and energy-efficient air handling units for both new builds and renovations. The platform is designed to make planning simple, installation fast and servicing efficient.

With more than 30 air handling unit models, the option of rotary heat exchanger or counterflow heat exchanger and connection to duct systems on the side or top, VEX1000 offers great flexibility. A wide range of configurations and accessories makes it easy to select the right unit based on the project's requirements for airflow, performance and space conditions.

The compact design, simple installation and digital documentation make planning simpler and safer. The proven performance reduces risk throughout the entire process - from design and installation to commissioning.

Low energy consumption, efficient heat recovery and easy maintenance can help reduce operating costs throughout the plant's lifetime. The service-friendly design also simplifies maintenance and can help limit plant downtime. This is an advantage for both the contract owner and the user of the building.

One platform. All the options. No compromise.



EXHAUSTO


VEX1000RT
(Rotor Top)
6 Versions
Airflow
400 - 7,460 m³/h
Top connection to duct system
VEX1000RS
(Rotor Side)
11 Versions
Airflow
400 - 9,340 m³/h
Side connection to duct system
EXHAUSTO
EXHAUSTO
EXHAUSTO
EXHAUSTO
VEX
VEX
VEX
Perfect
Airflow Fit



VEX1000CS
(Counterflow Side)

9 Versions
Airflow
400 - 7,390 m³/h

Side connection
to duct system

EXHAUSTO

Full flexibility up to 9,340 m³/h

VEX1000RS - Rotor. Side spigot

	Max ErP2018
VEX1080	9340 m³/h
VEX1065	7500 m³/h
VEX1060	6260 m³/h
VEX1050	5770 m³/h
VEX1045	4860 m³/h
VEX1035	3950 m³/h
VEX1030	3100 m³/h
VEX1020	2360 m³/h
VEX1015	1760 m³/h
VEX1010	1280 m³/h
VEX1005	900 m³/h

VEX1000RT - Rotor. Spigot in top

VEX1065	7460 m³/h
VEX1050	5600 m³/h
VEX1035	3900 m³/h
VEX1020	2360 m³/h
VEX1015	1760 m³/h
VEX1010	1250 m³/h

VEX1000CS - Counterflow. Side spigot

VEX1065	7390 m³/h
VEX1055	6025 m³/h
VEX1050	5545 m³/h
VEX1045	4475 m³/h
VEX1030	3575 m³/h
VEX1025	2505 m³/h
VEX1020	1995 m³/h
VEX1015	1715 m³/h
VEX1010	1120 m³/h









Highly Efficient

Up to 90% Heat Recovery



VEX1000 has been developed for modern buildings with compact, efficient ventilation and up to 90% heat recovery - for a good indoor climate and high comfort. The range from 400 to 9,340 m³/h with optional heat exchanger, rotary or counterflow, allows you to always chose a model that fits the exact requirements for airflow, performance and dimension – Perfect airflow fit!

An extensive range of standard models combined with a wide range of accessories makes it easy to configure the optimal ventilation solution for all stakeholders.

Up to 20% energy savings with aDCV

VEX1000 is designed for energy-efficient ventilation. With adaptive demand control (aDCV*), energy consumption can be reduced by up to 20% - while maintaining indoor climate and performance.

**) With aDCV, energy savings of up to 20% can be achieved compared to a demand-controlled system with constant pressure. The 20% is calculated by comparing energy consumption in different operating situations throughout the day.*



Extremely compact

More air. Less space. It's a perfect fit!

The VEX1000 is designed to deliver the greatest possible air capacity with the smallest possible space requirement - the optimal solution for both renovations and new buildings.

The compact and flexible design, with the option of connection on both sides and top, makes it easy to choose the right solution from the same platform - VEX1000.

For renovation projects, the SPLIT version makes it possible to transport the VEX1000 into the building, even where access is restricted or difficult.

Quality, energy efficiency and compactness are uncompromising requirements - VEX1000 combines the best possibilities to choose the perfect solution.

Ultra compact
Mono - duo - trio

VEX1000RS - Rotor. Side spigot

VEX1005RS A x B x C	959 x 720 x 1307 mm
VEX1010RS A x B x C	1239 x 720 x 1347 mm
VEX1015RS A x B x C	1239 x 809 x 1461 mm
VEX1020RS A x B x C	1239 x 905 x 1461 mm
VEX1030RS A x B x (C + D)	1443 x 1016 x (830 + 830) mm
VEX1035RS A x B x (C + D)	1443 x 1117 x (830 + 830) mm
VEX1045RS A x B x (C + D)	1628 x 1217 x (865 + 865) mm
VEX1050RS A x B x (C + D)	1628 x 1319 x (865 + 865) mm
VEX1060RS A x B x (C + D)	1838 x 1403 x (900 + 900) mm
VEX1065RS A x B x (C + D)	1838 x 1493 x (900 + 900) mm
VEX1080RS A x B x (C + D)	2010 x 1609 x (1052 + 1052) mm*

VEX1000RT - Rotor. Spigot in top

VEX1010RT A x B x C	1482 x 715 x 1344 mm
VEX1015RT A x B x C	1482 x 804 x 1458 mm
VEX1020RT A x B x C	1482 x 898 x 1458 mm
VEX1035RT A x B x (C + D)	1726 x 1102 x (862 + 862) mm
VEX1050RT A x B x (C + D)	1916 x 1306 x (884 + 884) mm
VEX1065RT A x B x (C + D)	2106 x 1492 x (899 + 899) mm

VEX1000CS - Counterflow. Side spigot

VEX1010CS A x B x C	1242 x 715 x 1544 mm**
VEX1015CS A x B x C	1242 x 805 x 1754 mm**
VEX1020CS A x B x C	1244 x 900 x 1754 mm**
VEX1025CS A x B x C	1446 x 900 x 2146 mm**
VEX1030CS A x B x C	1446 x 900 x 2374 mm**
VEX1045CS A x B x (C + D + E)	1472 x 1105 x (865 + 1320 + 865) mm*
VEX1050CS A x B x (C + D + E)	1472 x 1310 x (865 + 1320 + 865) mm*
VEX1055CS A x B x (C + D + E)	1472 x 1455 x (898 + 1320 + 898) mm*
VEX1065CS A x B x (C + D + E)	1845 x 1645 x (898 + 1320 + 898) mm*

The dimensions are exclusive of base, hinges and handles.

**) If access route is < 900mm, select SPLIT option - **) If a bag filter is selected, the length is increased by 360 mm*

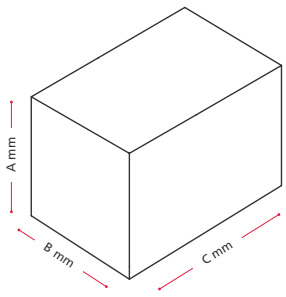

Monoblock = one-piece unit
Supplied in one section
Dimensions A x B x C
RS/RT: Removable front panel, screwed
CS/CT: Two inspection doors and one removable panel (middle)

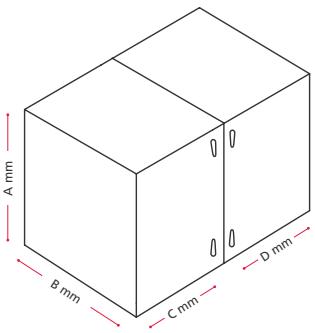

Duoblock = two-piece unit
Comes in two sections
Dimensions A x B x (C + D)
Two inspection doors with handles

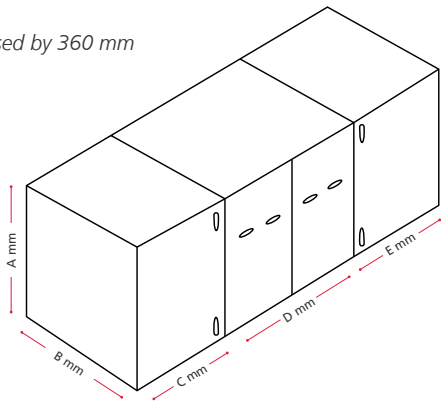

Trioblock = three-part unit
Comes in three sections
Dimensions A x B x (C + D + E)
Two inspection doors and two removable panels (middle)

EXcon+
PLUS for more benefits

The VEX1000 is supplied with an integrated EXcon+ control system with built-in WiFi connection for quick connection to tablet, HMI panel or PC. The new intuitive user interface and pre-defined user profiles ensure quick and easy installation and commissioning of the indoor climate in your building.

At the same time, there is flexibility to choose between 3 connection options.

EXcon+

EXcon+ control

All sensors and electrical components are installed and connected in unit.

Controller Ready

All (selected) sensors and electrical components are included and connected.

External sensors (pressure etc.) are not included.

The customer installs their own optional control system.

Without control

Without sensors or electrical components

Customer installs and connects all sensors and electrical components

The new EXcon+ control system supports advanced control of the indoor climate in all areas of application.









The automation box can be placed flexibly to suit your needs both indoors and outdoors.

- On the wall up to 10 m from the VEX unit
- On a stand next to the VEX (stand is an accessory)
- Outside or inside when VEX1000 is mounted on the roof

This allows for easy access wherever space and installation conditions are most suitable.

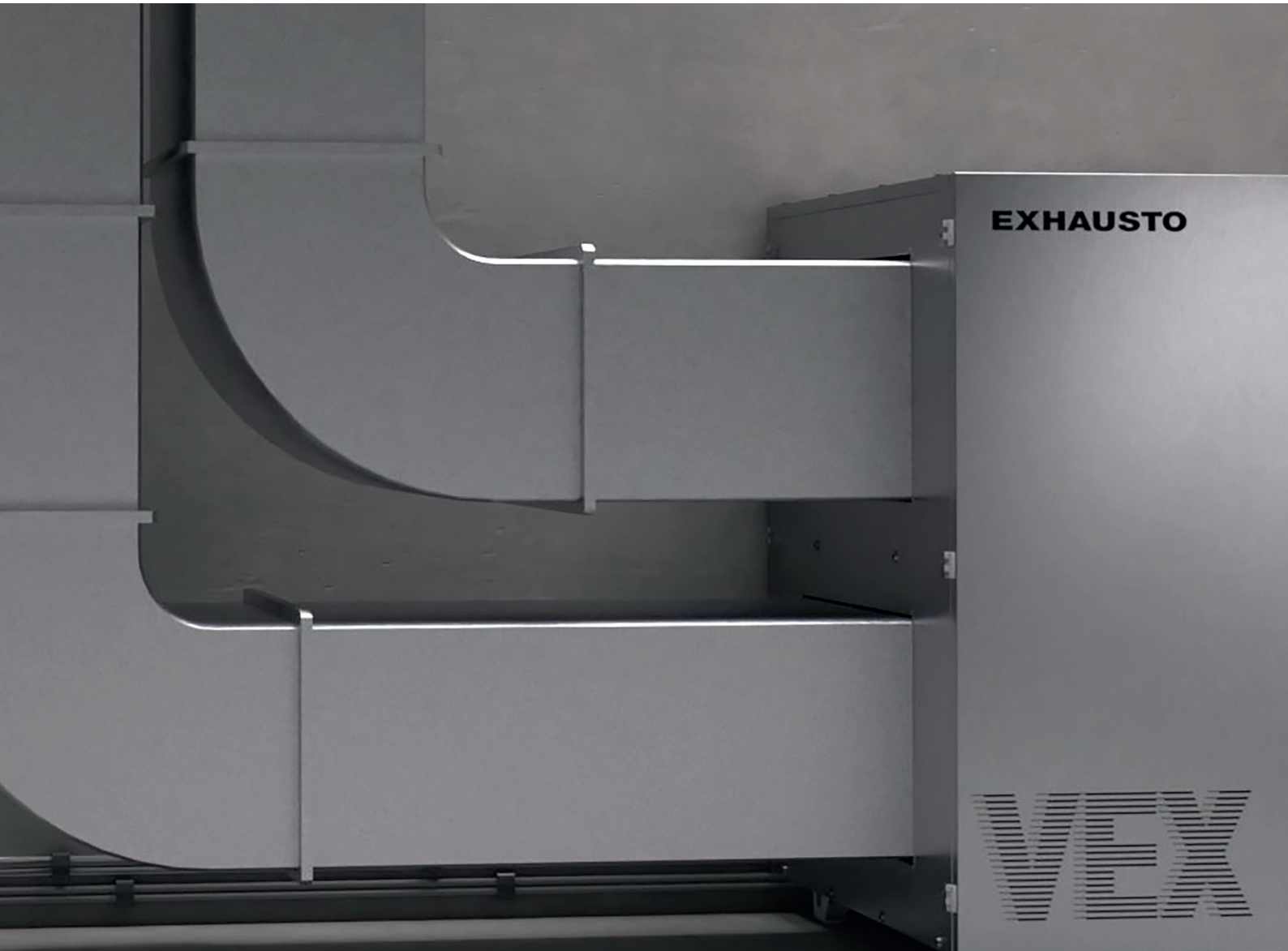

VEX1000
Rotary heat exchanger

Self-supporting sandwich housing construction. 50 mm panel thickness with mineral wool insulation.

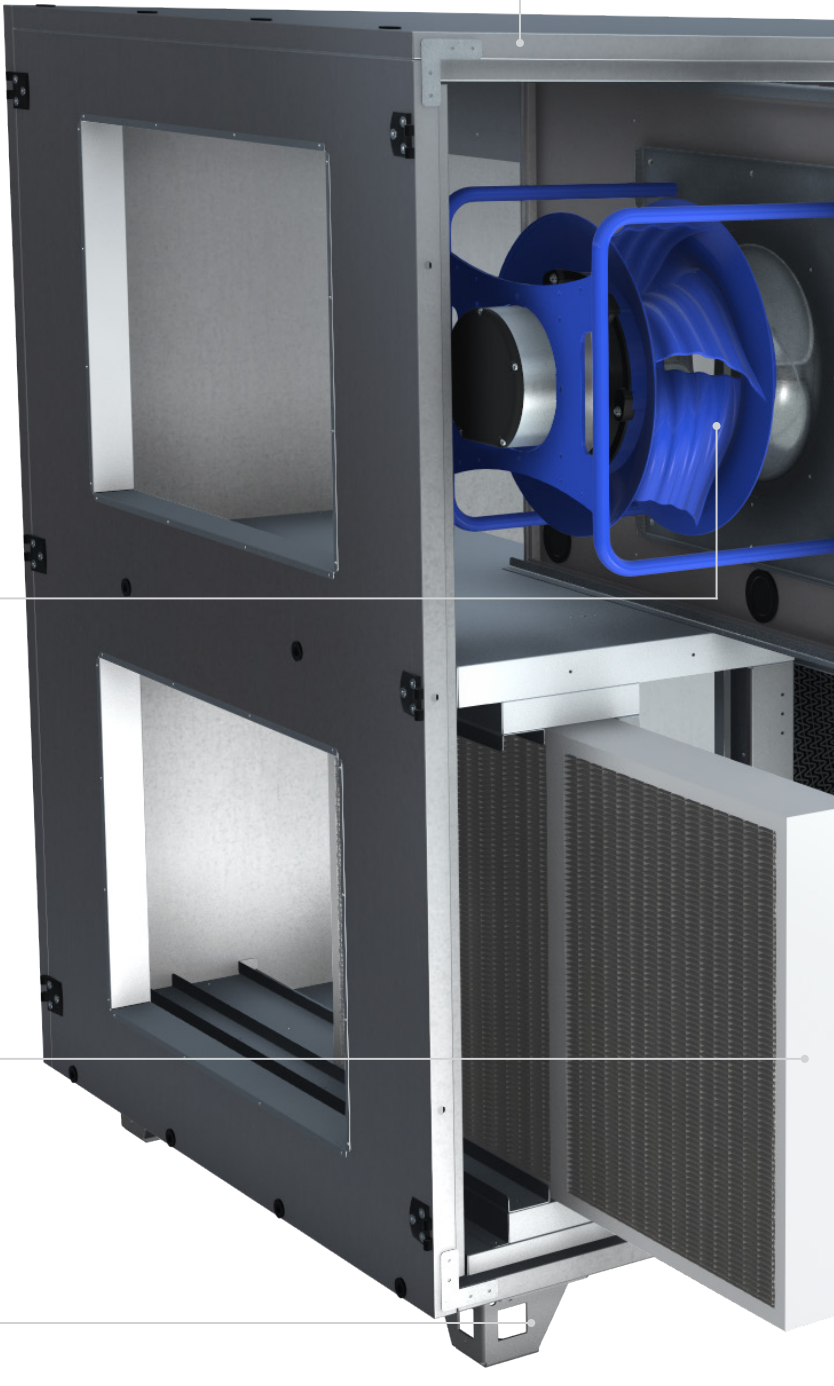

Mechanical output according to EN1886	
Thermal factor (T)	T2
TB factor	TB2
Cabinet strength	D2
Density (-400Pa/+700Pa)	L1/L2
Filter bypass leakage	F9
Corrosion category	C5

Efficient centrifugal fan in plug-in fan design with EC motor and integrated speed control.

Two-step outdoor air filtration, bag or panel filter

Panel - filter class	Bag - filter class
G4: Coarse 85% (pre-filter only)	-
M5: ePM10 75%	M5: ePM10 65%
F7: ePM1 55%	F7: ePM1 65%
F9: ePM1 80%	F9: ePM1 85%

Flexible mounting with feet or base frame.
Both variants with height-adjustable screws (included).

EUROVENT CERTIFIED PERFORMANCE
AHU n° 16.01.020
Range: VEX100,200,300,1000,4000 & 5000
www.eurovent-certification.com

Energieeffizienzklasse A+ | Energieeffizienzklasse A | Energieeffizienzklasse B

HYGIENE STANDARD VDI 6022 HYGIENE STANDARD

Designed for easy maintenance

The unit concept is consistently easy to service and clean. All relevant components are easily accessible and can be fully extended. It supports hygienic operation in accordance with VDI6022.

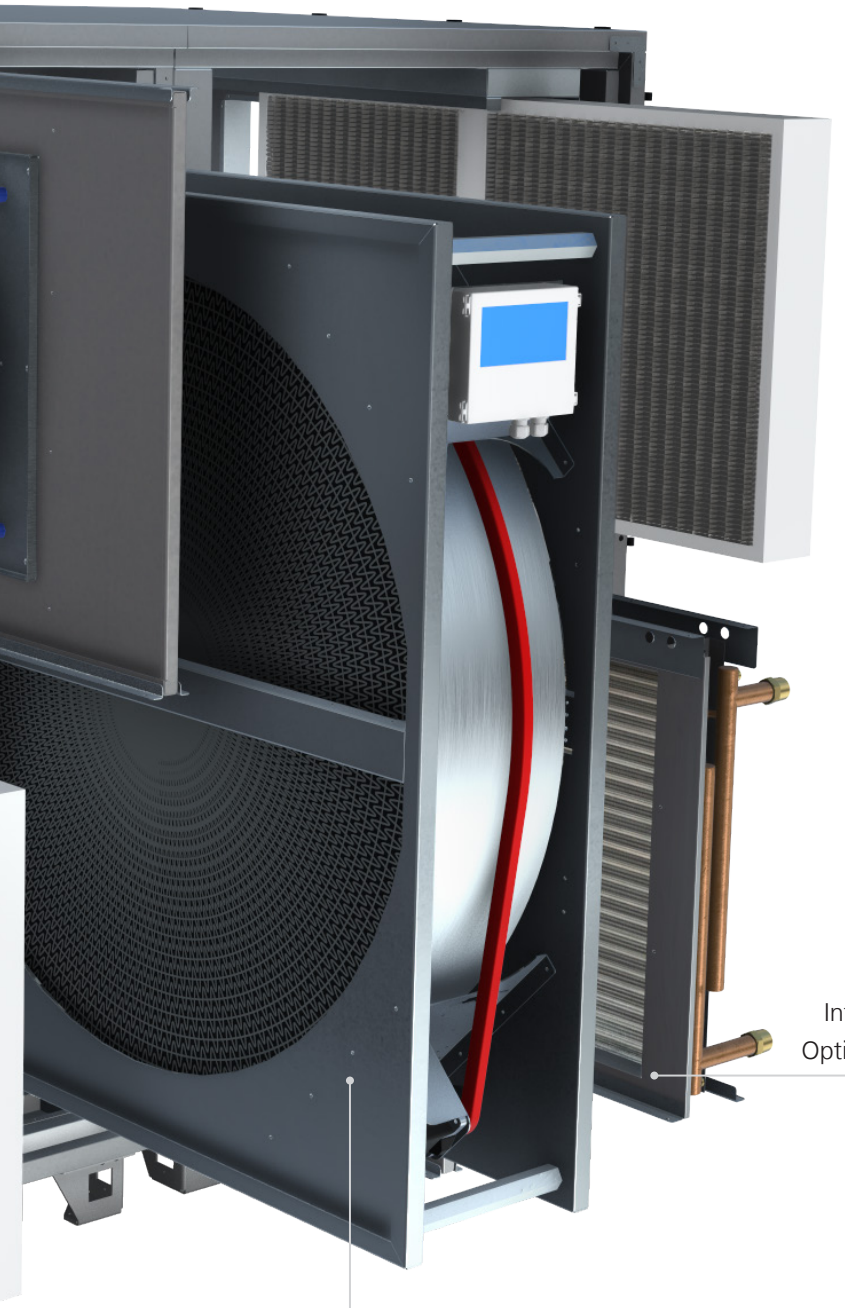

Accessories & Options
Closing damper
Flexible duct connections
Duct mounted silencer
Heating coil and/or cooling coil
Sensors (CO2/VOC/PIR)
Extraction and outdoor air hoods
ALC - Automatic leakage check
aDCV (Adaptive Demand-Controlled Ventilation)
Recirculation module (Duoblock units only)
Fire damper control
Stand for external control box
For indoor and outdoor use
Feet or mounting base
G4 or F9 filters

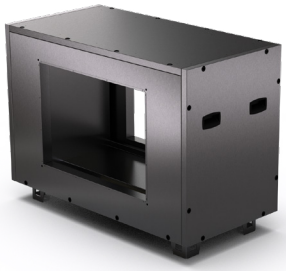

Integrated heating or cooling coil (water, electric or DX coil).
Option of external CW or DX coil, duct mounted or in cabinet.

Rotary heat exchanger with condensing rotor as standard.
Accessories: Sorption- or epoxy coating.

VEX1000
Counterflow exchanger

Self-supporting sandwich housing construction. 50 mm panel thickness with mineral wool insulation.

Mechanical output according to EN1886	
Thermal factor (T)	T2
TB factor	TB2
Cabinet strength	D2
Density (-400Pa/+700Pa)	L1/L2
Filter bypass leakage	F9
Corrosion category	C5

Two-step outdoor air filtration, bag or panel filter

Panel - filter class	Bag - filter class
G4: Coarse 85% (pre-filter only)	-
M5: ePM10 75%	M5: ePM10 65%
F7: ePM1 55%	F7: ePM1 65%
F9: ePM1 80%	F9: ePM1 85%

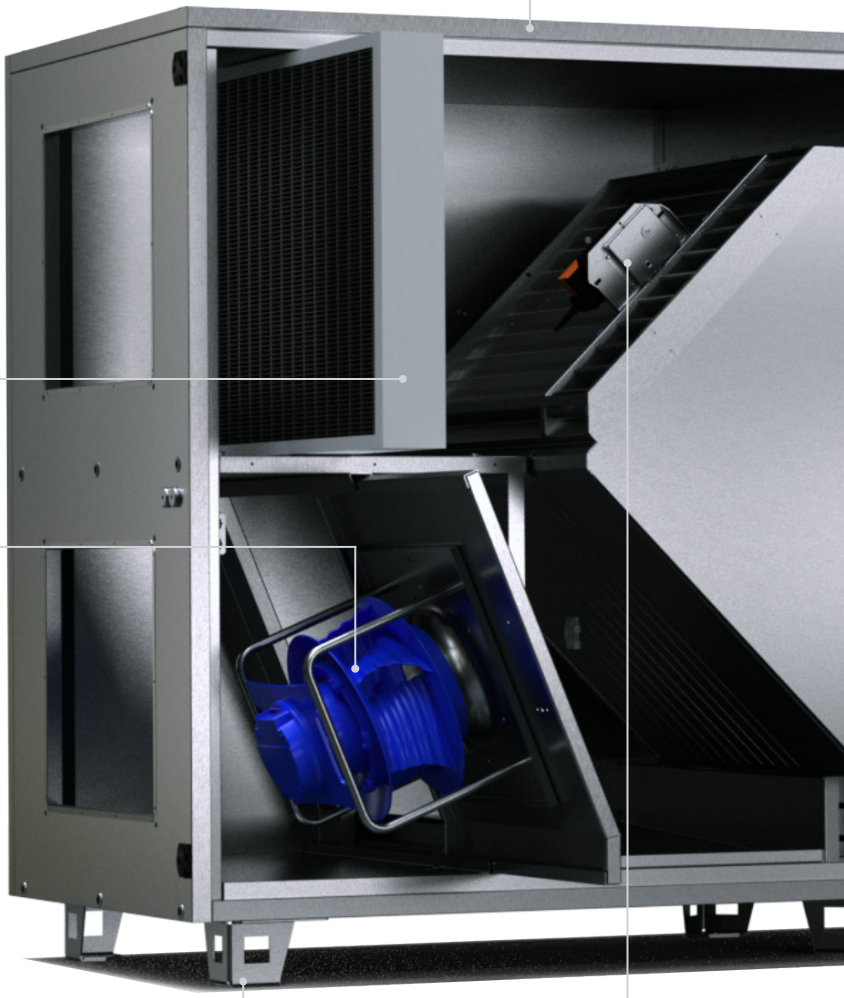

Efficient fan in plug-in fan design with EC motor and integrated controller.

Pressure-controlled bypass de-icing ensures intelligent protection of the counterflow heat exchanger - when needed.

The EXcon+ control system continuously monitors the operating conditions and automatically activates bypass de-icing if there is a risk of ice formation.

This ensures stable and safe operation throughout the season.

Flexible mounting with feet or base frame.
Both variants with height-adjustable screws (included).

EUROVENT CERTIFIED PERFORMANCE
AHU n° 16.01.020
Range: VEX100,200,300,1000,4000 & 5000
www.eurovent-certification.com

Energieeffizienzklasse A+ | Energieeffizienzklasse A | Energieeffizienzklasse B

HYGIENE STANDARD VDI 6022 HYGIENE STANDARD

Designed for easy maintenance

The unit concept is consistently easy to service and clean. All relevant components are easily accessible and can be fully extended. It supports hygienic operation in accordance with VDI6022.

Accessories & Options
Closing damper
Flexible duct connections
Duct-mounted electric preheating coil
Duct mounted silencer
Heating coil and/or cooling coil
Sensors (CO2/VOC/PIR)
aDCV (Adaptive Demand-Controlled Ventilation)
Extraction and outdoor air hoods
Fire damper control
Stand for external control box
For indoor and outdoor use
Feet or mounting base
Unit in black plate

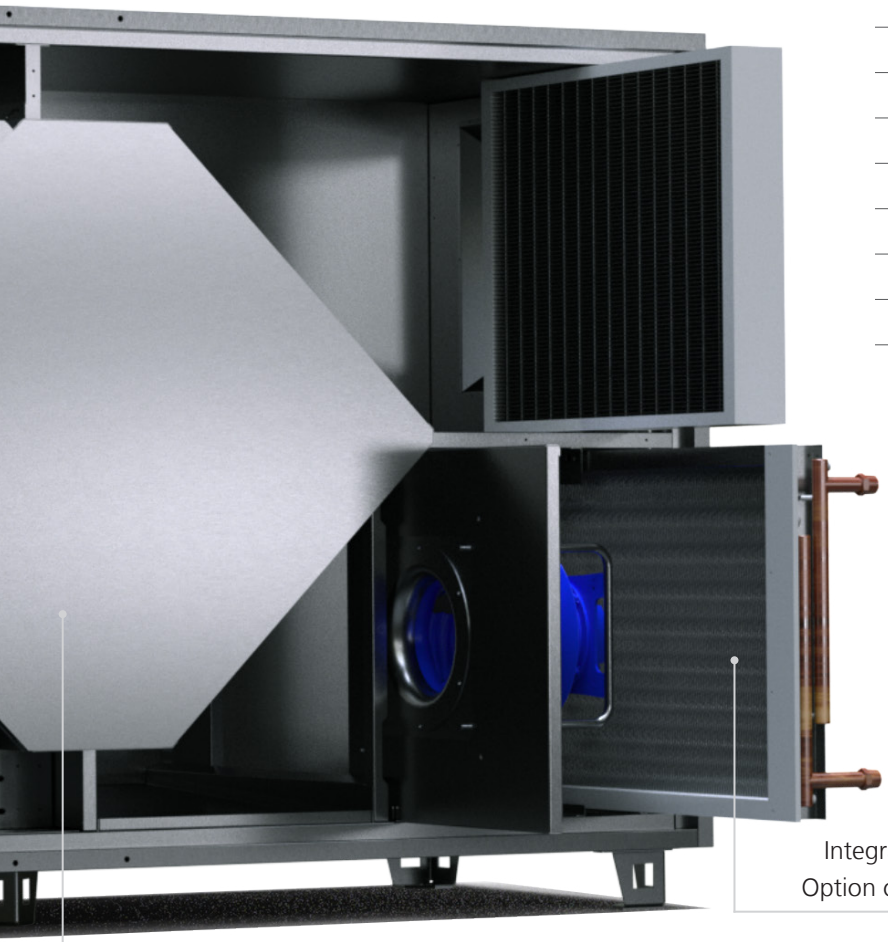

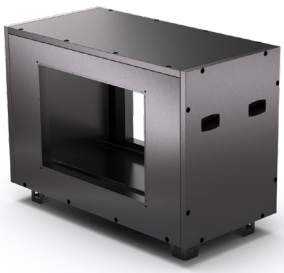

Integrated heating or cooling coil (water, electric or DX coil).
Option of external CW or DX coil, duct mounted or in cabinet.

Counterflow heat exchanger in 3 different types;
Sensible counterflow heat exchanger, enthalpy exchanger for humidity recovery and epoxy-coated exchanger for particularly demanding environments

Online documentation Fast. Easy. Digital.

With the VEX1000 series, access to technical documentation has been redesigned. All unit-specific documents are available centrally and digitally. For installation, commissioning, maintenance and service.

Each VEX1000-unit is equipped with a QR code on the type plate.

The QR code on the model plate takes you directly to the device-specific online documentation.

All relevant documents can be downloaded here together. A quick guide is supplied in printed form with the unit



Digital - always at hand
Digital delivery of information reduces the amount of printed documents. Documents are available online and replace traditional paper documentation where it makes sense. Saving costs for printed material, prevents reprinting and and you always have easy access to unit-specific documentation.

The following content is available in the online documentation:

- Installation and Maintenance Manuals
- Design of EXselectPRO
- Factory Test Reports
- Environmental Product Declaration (EPD)
- EC Declaration of confirmation
- ECO Design Datasheets

A compact quick guide is included in printed form upon delivery of the device.

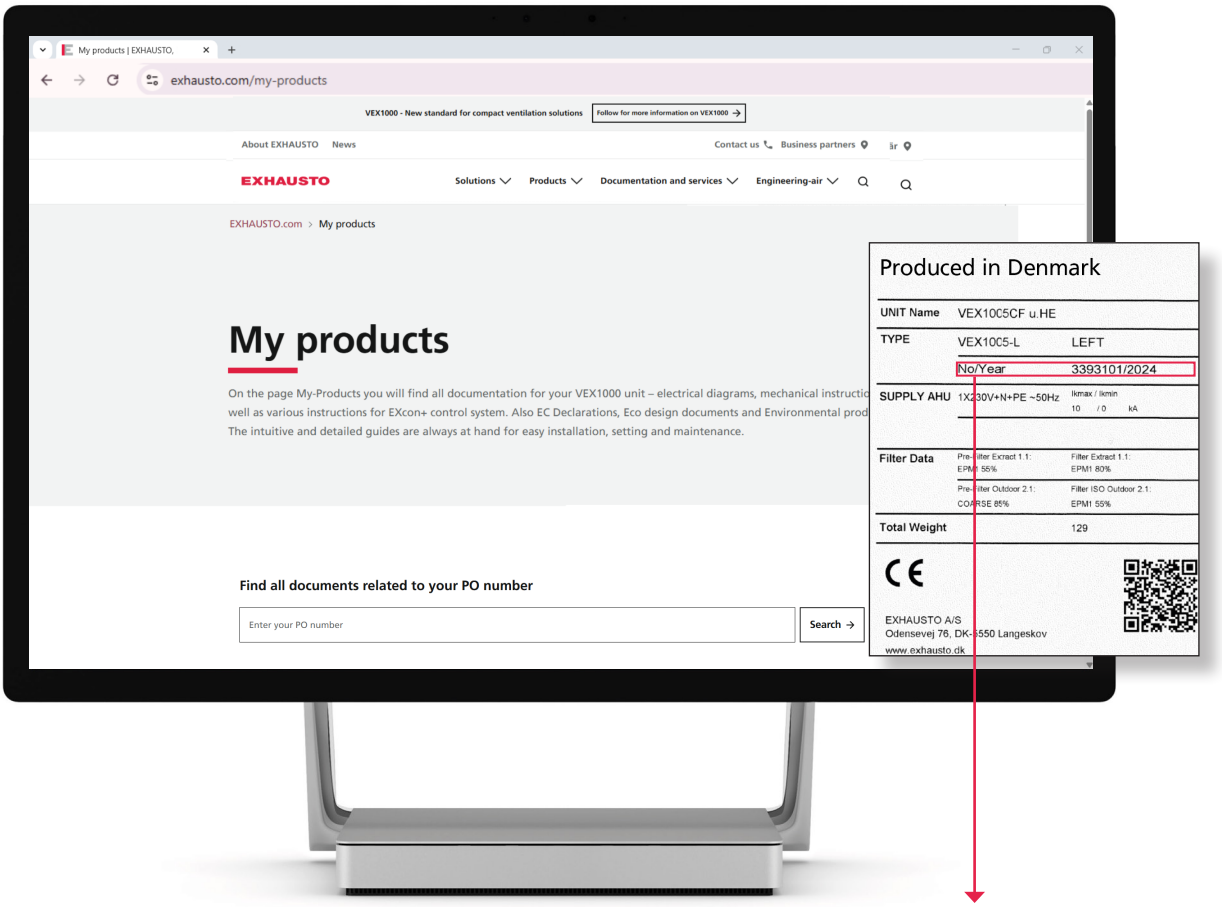

Example of type plate:
No/Year = 3393101/2024 → Enter: 3393101

MyProducts: Order-related documents

MyProducts is the central download platform for unit-specific documents.

The documents are uniquely linked to the delivered VEX1000 unit. Access takes place automatically via the QR code on the name plate. After scanning, the appropriate MyProducts page opens with all relevant documents for the specific order. The supplied documents correspond to the delivery condition of the unit and remain permanently available for operation and service.

If access to the unit is not possible, the documents can alternatively be called up via the production number. This number is stated on the name plate. Entering the production number in the search field on the MyProducts platform leads directly to the corresponding documentation.

Two powerful options

SPLIT: individual adaptation for tight slots
Especially for renovation projects, the access route can be narrow. However, you should not let space be a limitation - here the VEX1000 can simply be selected as a SPLIT solution.

With a SPLIT solution, the unit is prepared for disassembly at the installation site. In order to ensure that the VEX unit functions satisfactorily after transport and assembly, EXHAUSTO offers authorised personnel to assemble the unit for an additional charge.

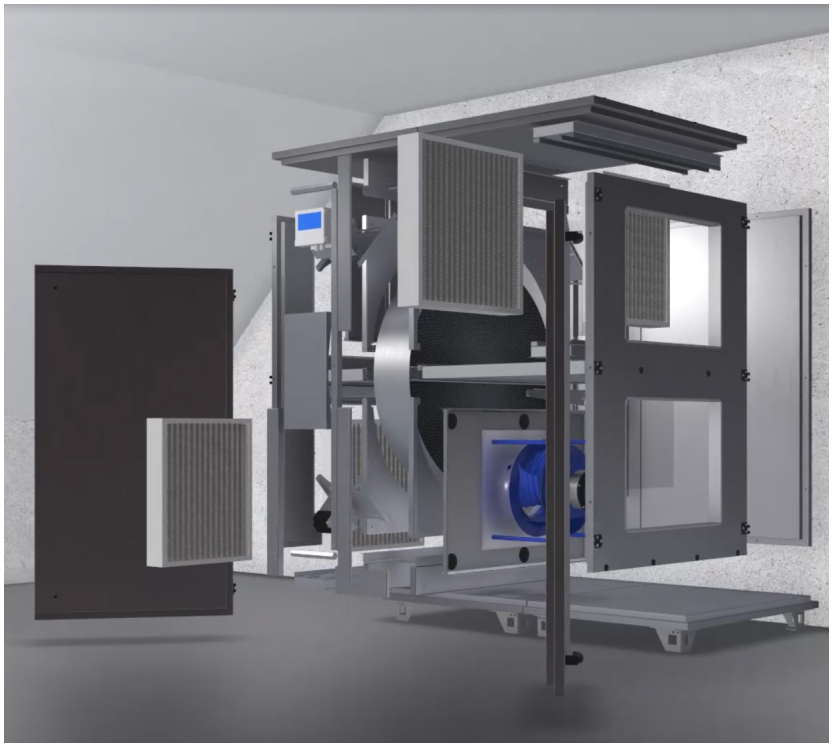

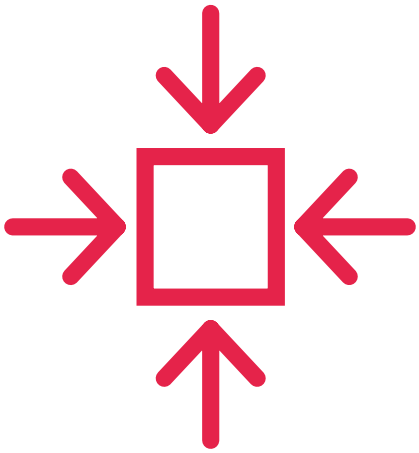

Design meets performance
VEX1000CS is now also available in a black painted version - developed for projects where both function and aesthetics are in focus. The black surface gives an exclusive look and makes the unit a natural part of modern architecture with visible outdoor installations, dark ceiling environments or technical rooms where details matter.

Same high quality. Same proven performance. Now with even more design freedom.



Quality without compromise

The VEX1000 platform is based on decades of experience in developing ventilation solutions, research into indoor climate and active participation in the development of Danish and European standards in the field of ventilation.

With this series, we have placed particular weight on future-oriented solutions in terms of technology, processes, materials and service life.

All VEX1000 units are Eurovent-certified and offer energy efficiency and corrosion resistance with the highest classification (C5).

By selecting materials and components and investing in our own processes, EXHAUSTO is working to reduce the VEX1000 series' CO_2 footprint compared to previous VEX series. It combines high quality and advanced technology with a focus on lower environmental impact.

Engineering Air

Since 1957, with knowledge and commitment, we have set new standards for ventilation solutions that provide a healthy indoor climate for millions of people who are at home, at work or in school.

With a focus on resources, we work purposefully to reduce the footprint of our products - both today and in the future..

We have followed the same approach with VEX1000. This time we have developed a platform of units that makes it easy to choose a solution that fits the individual project exactly.

Our ambition was clear: to set a new standard for compact ventilation solutions.

VEX1000 is the result of close European cooperation between customers and our specialists in development, engineering, production, sales and marketing. Customer needs have been the starting point - combined with decades of experience and a strong focus on indoor climate and energy efficiency.

We call this Engineering Air.

3006797 - 10/2026 - We reserve the right to make changes without notice.

EXHAUSTO Export
Odensevej 76
DK-5550 Langeskov

Tel. +45 65 66 12 34
export@exhausto.dk
www.exhausto.com

EXHAUSTO